Donaldson®
Torit®

Unimaster® Dust Collector

UMA 40, 70, 100, 150 and 250 Built After August 2005
UMA 450 and 750 Built After March 2006

Installation and Operation Manual

Installation, Operation, and Service Information

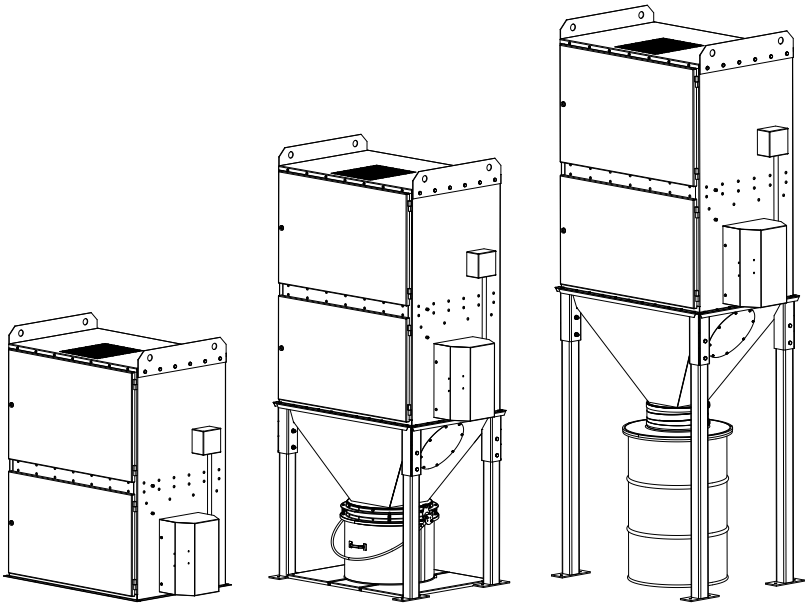

UMA 250
Bin Vent Base
(H Type)

UMA 250
Bin Base

UMA 250
55-Gallon Drum Base

This manual contains specific precautions related to worker safety. The hazard alert image denotes safety related instructions and warnings in this manual. DO NOT operate or perform maintenance on this collector until you have read and understood the instruction and warnings contained within this manual.

English
Master Language

IOM AD3547701 (ENG)
Revision 4

IMPORTANT NOTES

This manual has been supplied to assist with the installation, operation and maintenance for the collector purchased. Please read the manual before installing, operating, or performing maintenance on the collector as it contains specific precautions for worker safety. It is the owner's responsibility to ensure that this manual is available for use by installers, operators and maintenance personnel that will be working with this collector. This manual is the property of the owner and should be left with the collector when installation has been completed. DO NOT operate this collector until you have read and understood the instructions and warnings located in the installation and operation manual.

For additional copies of this manual, contact Donaldson Torit

The Safety Alert Symbol indicates a hazardous situation which, if not avoided could result in death or serious injury. Obey all safety messages following this symbol to avoid possible injury or death. The possible hazards are explained in the associated text messages.

CAUTION

CAUTION, used with the safety alert symbol, indicates a hazardous situation which, if not avoided, could result in minor or moderate injury.

NOTICE

NOTICE indicates a potential situation or practice which is not expected to result in personal injury, but which if not avoided, may result in damage to equipment.

Contents

IMPORTANT NOTES i
Safety Communication 1
Description 2
Purpose and Intended Use 2
Operation 3
Inspection on Arrival 4
Installation Codes and Procedures 4
Installation 4
  Foundations or Support Framing 4
  Collector Location 5
  Hoisting Information 5
Standard Equipment 5
  Hopper and Leg Installation 5
  Provisional Anchor Bolt Recommendations 6
  Collector Installation 6
  Electrical Wiring 8
  Inlet Assembly 8
Preliminary Start-Up Check 12
Maintenance Information 13
  Operational Checklist 13
  Filter Removal and Installation 13
Optional Equipment 15
  Magnehelic® Gauge 15
  Caster Base 16
  Static Bonding for Filters 16
  Explosion Vent 17
Troubleshooting 18
Product Information 19
Service Notes 19
Donaldson Industrial Air Filtration Warranty 20

Magnehelic® is a registered trademark of Dwyer Instruments, Inc.

Safety Communication

Improper operation of dust collectors and/or dust control systems may contribute to conditions in a work area or facility which could result in severe personal injury, and product or property damage. All dust collection equipment should be used only for its intended purpose and should be properly selected and sized for its intended use.

Process owners have important responsibilities relating to identifying and addressing potential hazards in their processes. When the potential for handling combustible dust exists within a process the process owner should include combustion hazards in their risk management activities and should comply with applicable codes and standards related to combustible dust.

Electrical installation must be performed by a qualified electrician.

This equipment is not designed to support site ducts, piping, or electrical services. All ducts, piping, or electrical services must be adequately supported to prevent injury and/or property damage.

Site selection must account for wind, seismic zone, and other load conditions.

Equipment may reach peak sound pressure levels above 80 dB (A). Noise levels should be considered when selecting collector location.

Combustible Dust Hazards

Among other considerations, the current NFPA standards require owners whose processes involve potentially combustible materials to have a current Dust Hazard Analysis, which can serve as the foundation for their process hazard mitigation strategy. Mitigation may include but is not limited to:

- Prevention of all ignition sources from entering any dust collection equipment.
- Selection and implementation of fire and explosion mitigation, suppression, and isolation strategies appropriate for the risks in their process.
- Development and use of work practices to maintain safe operating conditions, and to ensure combustible dust does not accumulate within their plant or process equipment.

Donaldson designs, manufactures, and sells industrial air filtration products for a wide variety of applications. Some applications may include processes or materials with inherent fire and explosion hazards. Donaldson is neither an expert nor a certified consultant in fire, spark, or explosion detection, suppression, or control. Donaldson does not provide engineering consulting services related to process or dust hazard analyses, or code and standard compliance. Complying with applicable codes and standards and managing the risks associated with the process or materials remains the responsibility of the process owner/operator. Donaldson may provide referrals to consultants, suppliers of equipment or services related to the detection and/or mitigation of sparks, fires and/or explosions, but Donaldson does not assume responsibility for any such referrals, nor does Donaldson assume any liability for the fitness of a mitigation strategy or product for a particular installation or application. The process owner's final selection of dust collectors and risk mitigation strategies should be based on the outcome of a Dust Hazard / Process Hazard Analysis performed by the process owner. Although early engagement of a dust collector supplier provides helpful insights on the availability and features of various products, process owners should consult with a combustible dust expert and/or a process safety expert before making actual product and mitigation strategy selections.

Donaldson recommends that all industrial air filtration system designs be reviewed and approved by an expert consultant who is responsible for the integrity of the system design and compliance with applicable codes and standards. It is the process owner's responsibility to understand the risks in their process and mitigate those risks in accordance with all applicable laws, regulations and standards, including those published by the NFPA. Donaldson also recommends that proper maintenance and housekeeping procedures and work practices be evaluated, developed, and followed to maintain any industrial air filtration products in safe operating condition.

Many factors beyond the control of Donaldson can affect the use and performance of Donaldson products in a particular application, including the conditions under which the product is used. Since these factors are uniquely within the user's knowledge and control, it is essential the user evaluate the Donaldson products to determine whether the product is fit for the particular purpose and suitable for the user's application. All products, product specifications, and data (airflow, capacity, dimensions, or availability) are subject to change without notice, and may vary by region or country.

Description

The Unimaster series dust collectors are self-contained, intermittent-duty dust collectors with bag style filters. This durable collector provides effective cleaning in a variety of industrial settings.

This collector can be used as a collector complete with legs, hopper and bin or 55 gallon drum for collecting the dust, or it can be configured without legs and hopper to be used for bin venting applications.

Standard sizes range from 43 to 753 sq ft of filter area and features a UMA controller to control the filter cleaning operation. Other options include explosion relief vents, static grounding, weather hoods and caster frames.

Purpose and Intended Use

CAUTION Misuse or modification of this equipment may result in personal injury.

Do not misuse or modify.

The Unimaster dust collectors are used to separate solid particulate from an airstream as part of a manufacturing process. It is an ideal choice for intermittent operations in plant processes. Several small collectors can be installed at dust generation sites throughout the plant resulting in total dust capture and flexibility. Some typical installations include blending/mixing, abrasive blasting, cleaning, cutting, drilling, grinding, milling, packing, polishing, sanding, and sawing.

Operation

During normal operation, dust-laden air enters the collector through the dirty-air inlet. The velocity is reduced and natural pre-separation, caused by the effects of gravity, takes place and heavier particulate falls directly into the collection bin or hopper. Fine particles collect on the outside surface of the filter bag and filtered air passes to the center of the bag and discharges through the clean-air outlet.

The Unimaster is an intermittent-duty collector, which means that cleaning starts when the fan is turned OFF and the appropriate fan run-down time is complete. The solid-state timer automatically starts the cleaning sequence 75-seconds after the fan is turned OFF. This is the fan run-down time. Power to controls must remain ON to operate the cleaning mechanism. The vibration motor starts and filter cleaning begins for a preset time of 30-seconds.

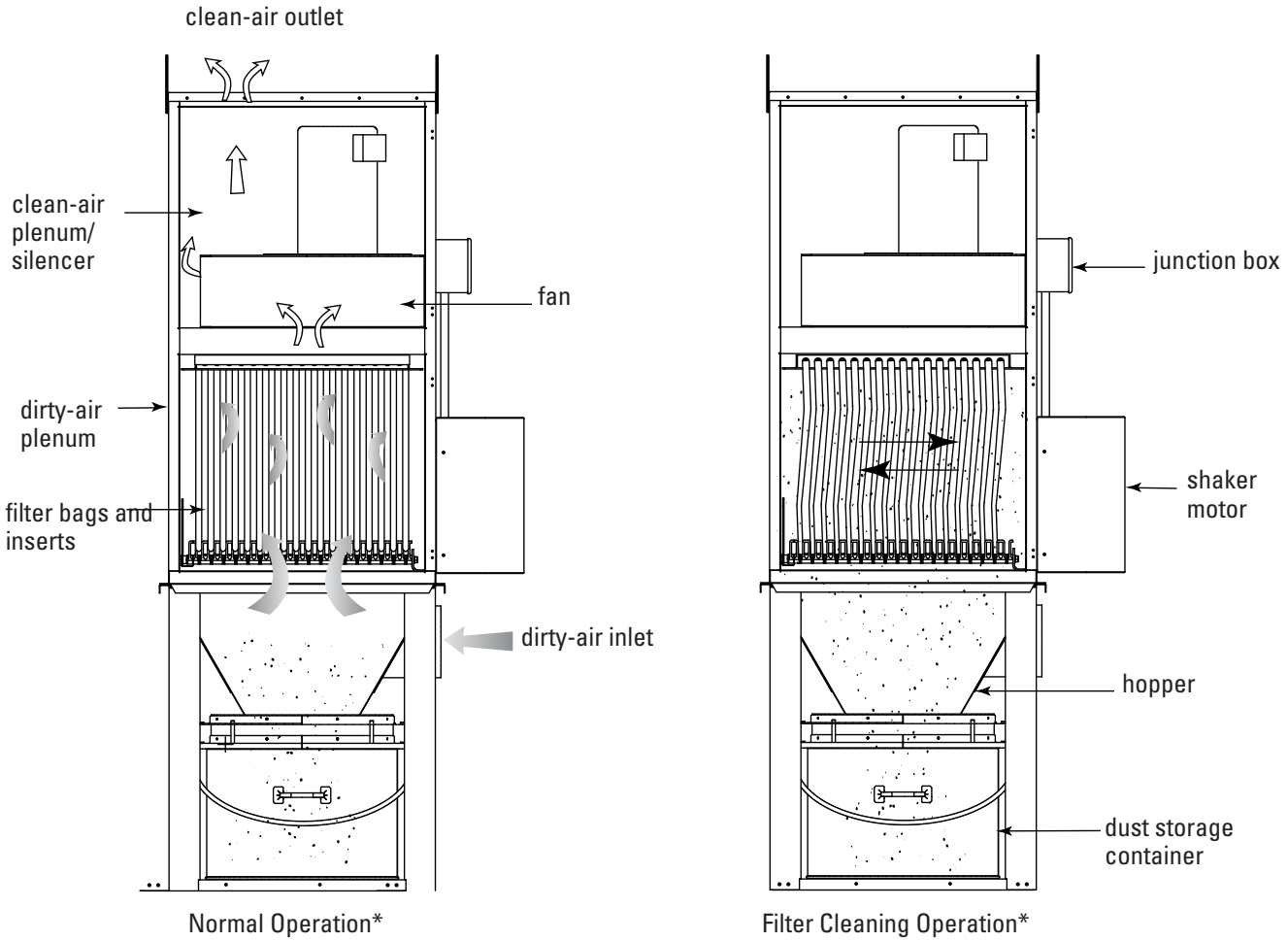

*Doors not shown on collector for illustrative purposes

Collector Operation

Inspection on Arrival

1. Inspect collector upon delivery.
2. Report any damage to the delivery carrier.
3. Request a written inspection report from the Claims Inspector to substantiate any damage claim.
4. File claims with the delivery carrier.
5. Compare collector received with description of product ordered.
6. Report incomplete shipments to the delivery carrier and your Donaldson Torit representative.
7. Remove crates and shipping straps. Remove loose components and accessory packages before lifting collector from truck.
8. Check for hardware that may have loosened during shipping.
9. Use caution removing temporary covers.

Installation Codes and Procedures

CAUTION Codes may regulate recirculating filtered air in your facility. Consult with the appropriate authorities having jurisdiction to ensure compliance with all national and local codes regarding recirculating filtered air.

Safe and efficient operation of the collector depends on proper installation.

Authorities with jurisdiction should be consulted before installing to verify local codes and installation procedures. In the absence of such codes, install collector according to the National Electric Code, NFPA No. 70-latest edition and NFPA 91 (NFPA 654 if combustible dust is present).

A qualified installation and service agent must complete installation and service of this equipment.

All shipping materials, including shipping covers, must be removed from the collector prior to or during collector installation.

NOTICE Failure to remove shipping materials from the collector will compromise collector performance.

Inspect collector to ensure all hardware is properly installed and tight prior to operating collector.

Installation

CAUTION Use proper equipment and adopt all safety precautions needed for servicing equipment.

Electrical service or maintenance work must be performed by a qualified electrician and comply with all applicable national and local codes.

Turn power off and lock out all power before performing service or maintenance work.

Do not install in classified hazardous atmospheres without an enclosure rated for the application.

Site selection must account for wind, seismic zone, and other load conditions when selecting the location for collectors.

Codes may regulate acceptable locations for installing dust collectors. Consult with the appropriate authorities having jurisdiction to ensure compliance with all national and local codes regarding mist collector installation.

Collectors must be anchored in a manner consistent with local code requirements. Anchors must be sufficient to support dead, live, seismic, and other anticipated loads.

Consult a qualified engineer for final selection of anchorage.

The collector is suitable for either indoor or outdoor installations. Reference the Rating and Specification Information.

Foundations or Support Framing

Prepare the foundation or support framing in the selected location. Foundation or support framing must comply with local code requirements and may require engineering.

Foundation and support framing must be capable of supporting dead, live, wind, seismic and other applicable loads. Consult a qualified engineer for final selection of foundation or support framing.

Collector Location

CAUTION Donaldson Torit equipment is not designed to support site installed ducts, interconnecting piping, or electrical services. All ducts, piping, or electrical services must be adequately supported to prevent severe personal injury and/or property damage.

When hazardous conditions or materials are present, consult with local authorities for the proper location of the collector.

Dust collection equipment may reach peak sound pressure levels above 80 dB (A). Noise levels should be considered when selecting collector location.

Locate the collector to ensure easy access to electrical supply, to simplify solids collection container handling and routine maintenance, and to ensure the straightest inlet and outlet ducts.

Provide clearance from heat sources and avoid any interference with utilities when selecting the location.

Portable collectors may require special installation accommodations.

Hoisting Information

CAUTION Failure to lift the collector correctly can result in severe personal injury and/or property damage.

Use appropriate lifting equipment and adopt all safety precautions needed for moving and handling the equipment.

A crane or forklift and qualified operator are recommended for unloading, assembly, and installation of the collector.

Location must be clear of all obstructions, such as utility lines or roof overhang.

Use all lifting points provided.

Use clevis connectors, not hooks, on lifting slings.

Use spreader bars to prevent damage to collector's casing.

Check the Specification Control drawing for weight and dimensions of the collector and components to ensure adequate crane capacity.

Allow only qualified crane or forklift operators to lift the equipment.

Refer to applicable OSHA regulations and local codes when using cranes, forklifts, and other lifting equipment.

Lift collector and accessories separately and assemble after collector is in place.

Use drift pins to align holes in section flanges during assembly.

Standard Equipment

CAUTION The collector has a high center-of-gravity and may overturn if not secured properly.

Secure the collector to the lifting device.

Use care when moving the collector.

Unimaster dust collectors are delivered partially assembled. Collector installation, optional equipment assembly, and electrical connections are completed at the job site.

Hopper and Leg Installation

CAUTION Anchors must comply with local code requirements and must be capable of supporting dead, live, wind, seismic, and other applicable loads.

Anchor sizes shown are provisional, as final anchor sizing will depend on jobsite load conditions, collector location, foundation/framing design variables and local codes.

Consult a qualified engineer for final selection of anchors.

Reference Typical Foundation Anchor and leg assembly drawing shipped with the collector prior to starting assembly.

Provisional Anchor Bolt Recommendations

1. Consider Hilti HIT-HY 200 Anchor System or equivalent. Quantity of anchor bolts should match the number of holes provided in the base plates.
2. Anchor diameter is typically 1/8-in less than baseplate hole diameter.
3. Corrosive environment or outdoor installation may require stainless steel anchors.

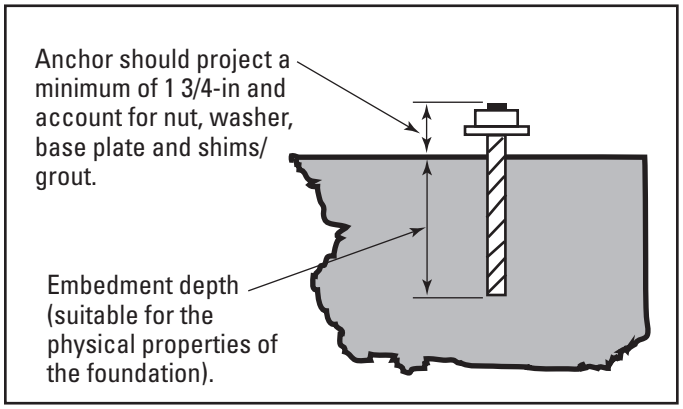

Typical Foundation Anchor

Collector Installation

UMA 40 to 70 (Hopper and 55-Gallon Drum Base Styles)

1. Prepare the foundation or support framing in the selected location. Locate and install anchors.
2. Lift collector into position over the anchor bolts and lower slowly.
3. Level collector horizontally and vertically, using steel shims under legs where required.
4. Secure collector to anchor bolts using customer-supplied hardware.

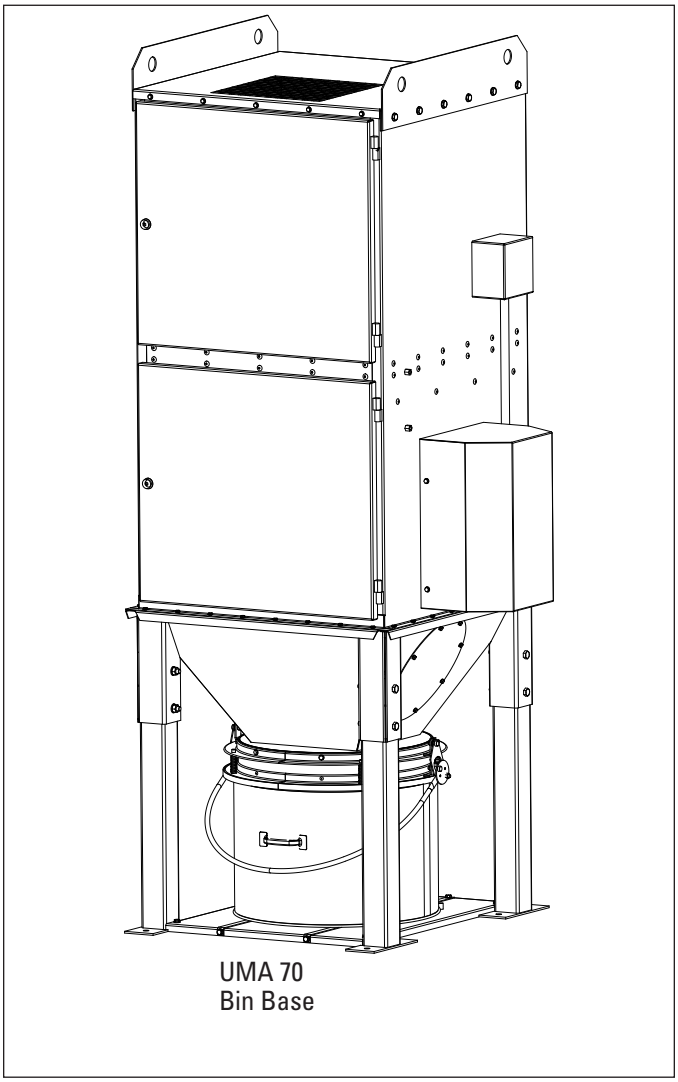

Typical Installation, UMA 40 to 70 Bin

UMA 100 to 750 or Two-Piece Shipments (Hopper and 55-Gallon Drum Base Styles)

1. Prepare the foundation or support framing in the selected location. Locate and install anchors.
2. Lift base, leg, and hopper assembly into position over the anchor bolts and lower slowly.
3. Level collector horizontally and vertically, using steel shims under legs where required.
4. Secure collector to anchor bolts using customer-supplied hardware.
5. Remove the lifting brackets from the top of the base assembly.
6. Apply two strips of sealant or caulk to the hopper's top flange: one toward the inside of the bolt pattern and one toward the outside of the bolt pattern.
7. Lift collector section into position over the base assembly and lower slowly.
8. Use drift pins to align holes.
9. Secure with bolts, washers, and hex nuts supplied. Tighten to form an airtight seal.

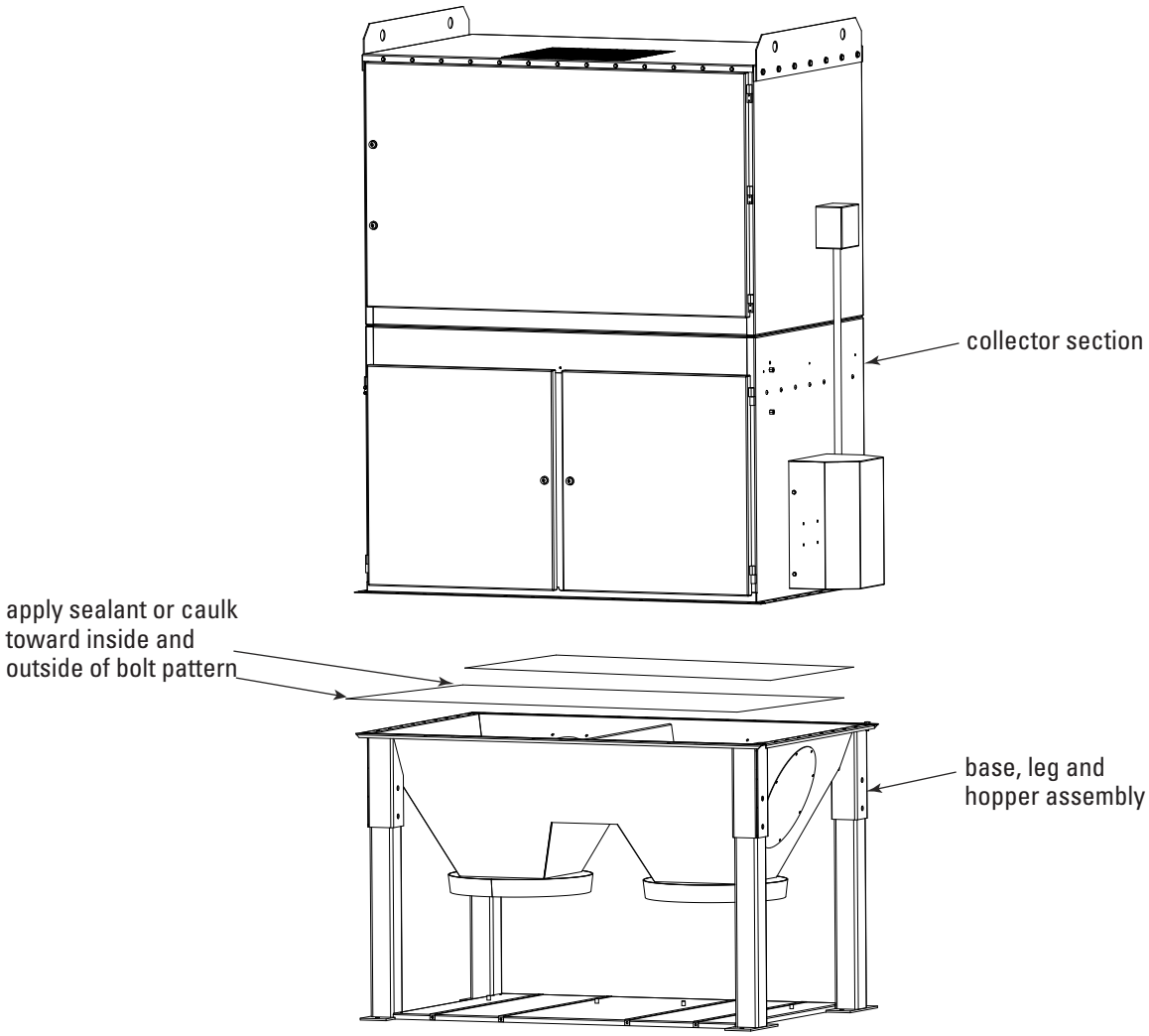

Typical Installation, UMA 100 to 750 or Two-Piece Shipment

Electrical Wiring

CAUTION Electrical installation, service, or maintenance work must be performed by a qualified electrician and comply with all applicable national and local codes.

Turn power off and lock out all power before performing service or maintenance work.

Do not install in classified hazardous atmospheres without an enclosure rated for the application.

Mount controller outside the influence area of any explosion relief panels, if present.

All electrical wiring and connections, including electrical grounding, should be made in accordance with the National Electric Code (NFPA No. 70-latest edition).

Check local ordinances for additional requirements that apply.

The appropriate wiring schematic and electrical rating must be used. See collector's rating plate for required voltage.

An electric disconnect switch having adequate amp capacity shall be installed in accordance with Part IX, Article 430 of the National Electrical Code (NFPA No. 70-latest edition). Check collector's rating plate for voltage and amperage ratings.

Refer to the wiring diagram for the number of wires required for main power wiring and remote wiring.

Inlet Assembly

All models are shipped with the inlet specified at the time of order. Side inlets are not interchangeable with back inlets. Contact Donaldson if additional changes are necessary.

1. Remove the inlet blank from the specified location.
2. Replace damaged sealant if necessary.
3. Secure inlet to collector using the hardware removed in Step 1.

The UMA controller operates the fan and shaker in the proper sequence to ensure effective filter cleaning. The controller contains an across-the-line fan starter and an across-the-line shaker motor starter.

1. Mount the controller in a convenient accessible location, free of vibration and temperature extremes.

   NOTICE Do not mount the controller directly to the collector. Mechanical vibration can damage the control.

2. Using the wiring diagram supplied with the controller, connect the power lead from a customer-supplied disconnect switch to the terminal block inside the controller, complying with all applicable codes for motor branch circuits.
3. Install conduit from the controller to the junction box located on the side of the collector. Use conduit and fittings compatible with the rating of the controller's enclosure.
4. Make the connections from the manual motor protector inside the controller to the terminal block in the junction box.

UMA Controller

The UMA Controllers are designed to work with three-phase, 50- or 60-Hz power supplies or optional single-phase power.

Operation

Start

Press START button.

Fan contactor M1 is energized, timer module sets, and the fan motor starts. Average operating period for fan is 4 hours.

Clean

Press CLEAN button.

Fan contactor M1 is de-energized and the timer is energized.

After approximately 75-seconds, the shaker motor contactor M2 is energized and the shaker motor runs for approximately 30-seconds.

Shaker motor contactor is de-energized and the timer resumes inactive status.

Note: Before a cleaning cycle can start by pressing the CLEAN button, the M1 fan contactor must have been energized for at least 30-seconds.

In the event of a power supply failure during a cycle, an internal safety feature ensures the controller automatically resets ready for the fan to be restarted. Reapplying power does not require the cycle to be completed.

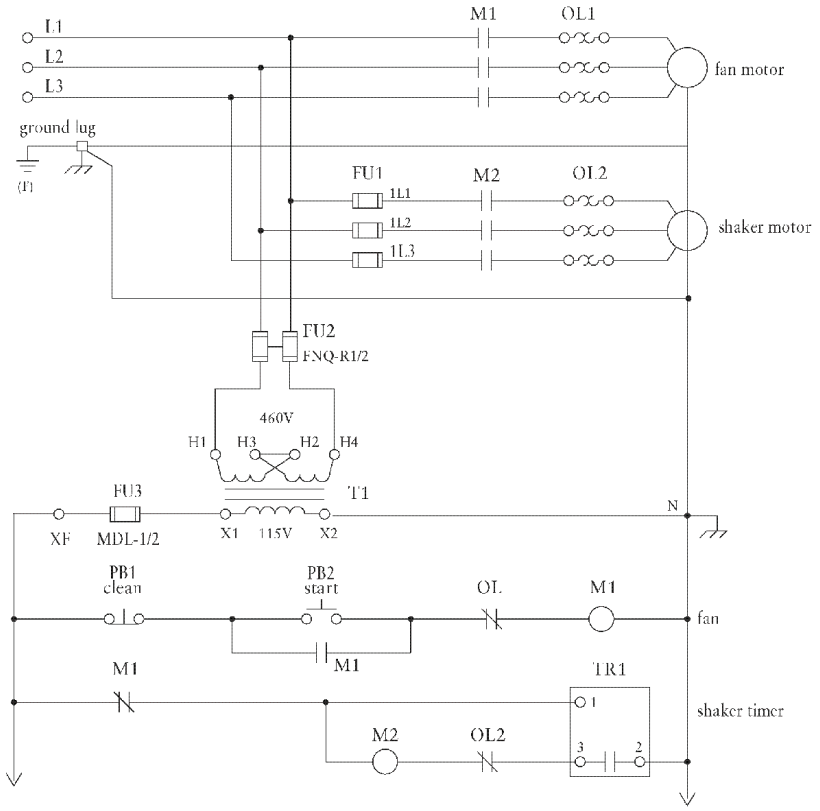

Typical Wiring Diagram, Three-Phase Power Supply

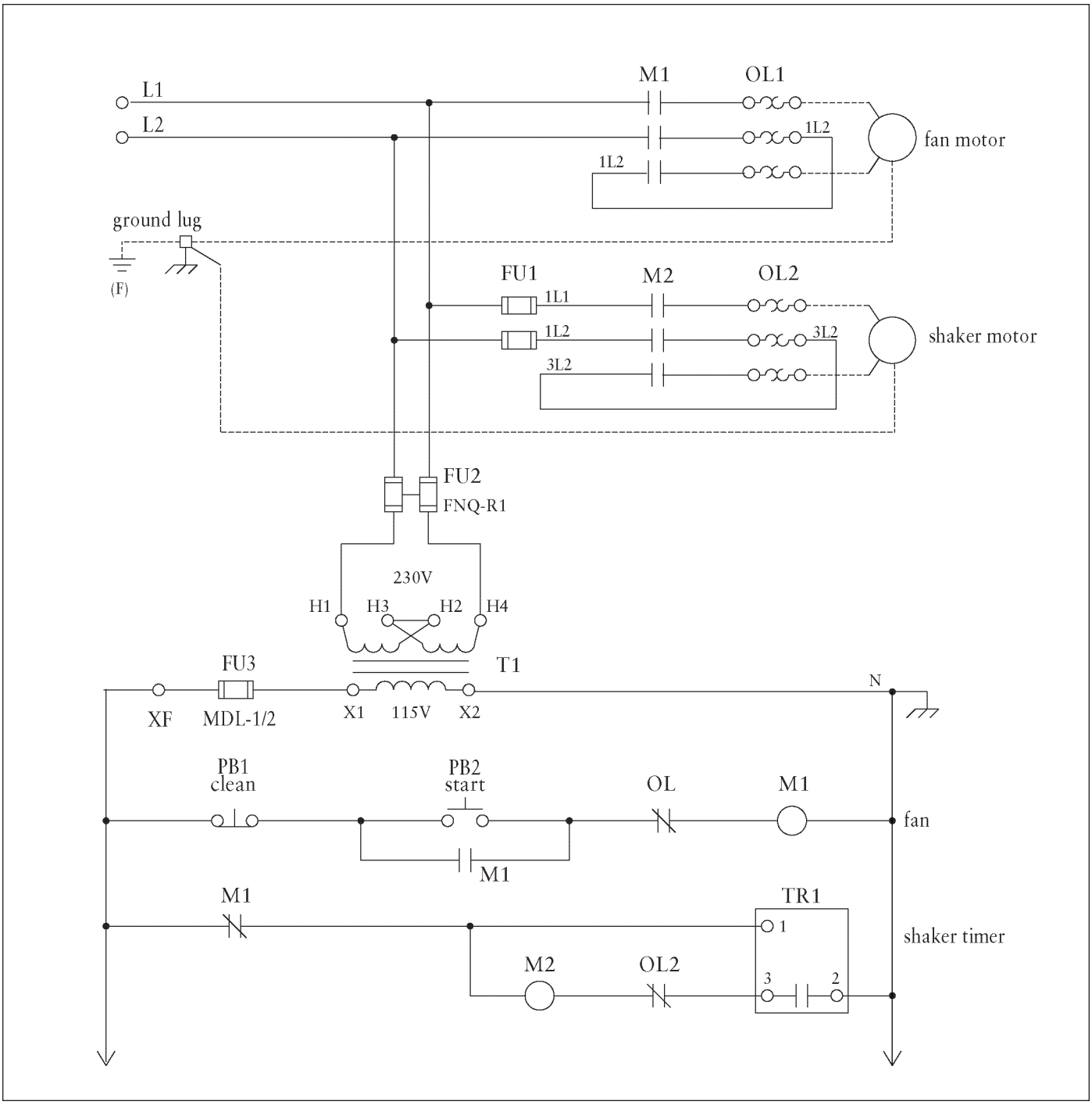

230-Volt, Single Phase Power Supply Wiring Diagram

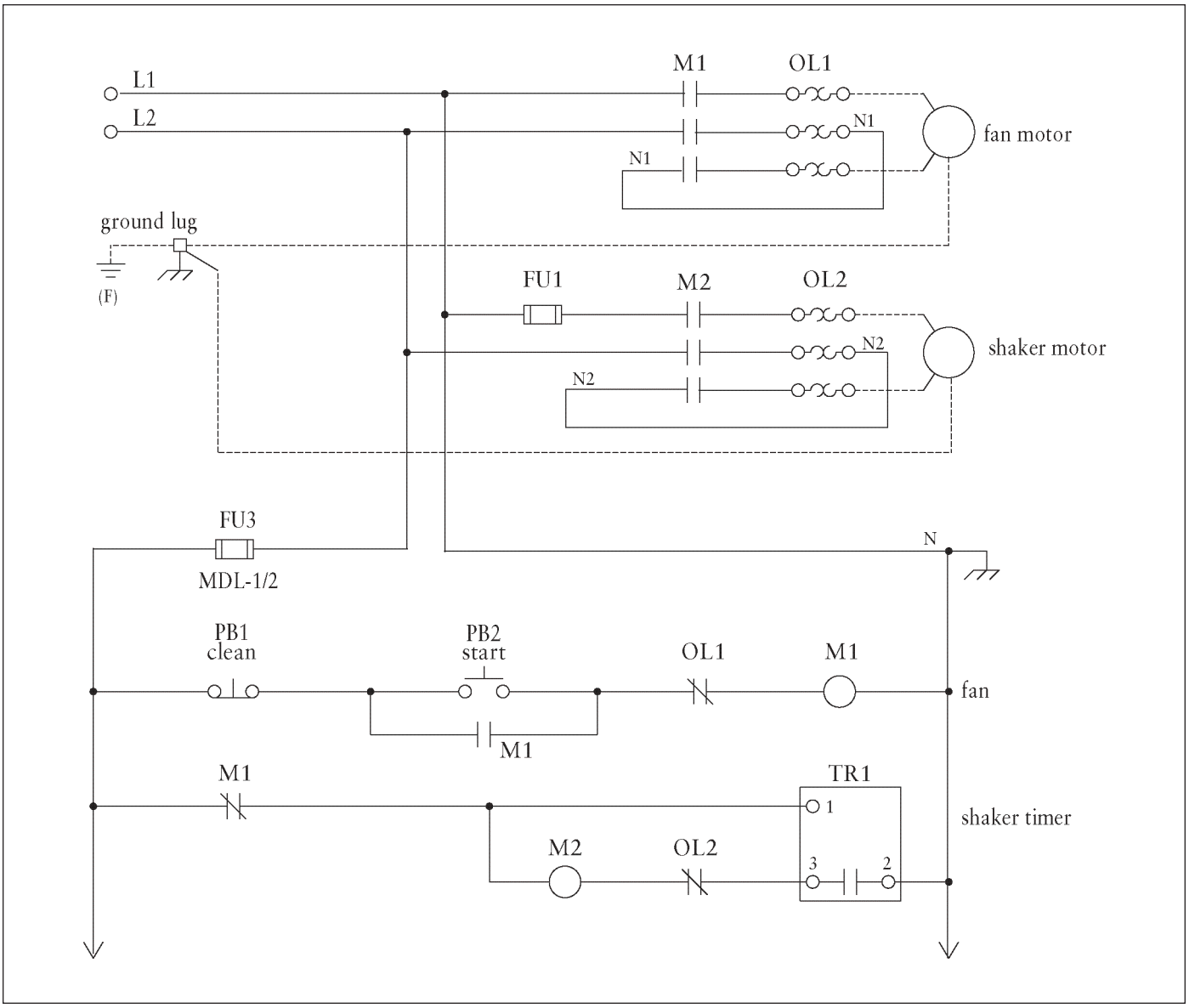

115-Volt, Single Phase Power Supply Wiring Diagram

Preliminary Start-Up Check

Instruct all personnel on safe use and maintenance procedures.

CAUTION Electrical work during installation, service or maintenance must be performed by a qualified electrician and comply with all applicable national and local codes.

Turn power off and lock out all power before performing service or maintenance work.

Check that the collector is clear and free of all debris before starting.

Do not install in classified hazardous atmospheres without an enclosure rated for the application.

1. Check all electrical connections for tightness and contact.
2. Check for proper rotation on all motors as described below.

   To reverse rotation, single-phase power supply: Follow manufacturer's instructions on the motor's nameplate.

   To reverse rotation, three-phase power supply: Switch any two leads on the motor junction box.

   CAUTION Do not look into fan outlet to determine rotation. View the fan rotation through the back of the motor.

   Check that the exhaust plenum is free of tools or debris before checking blower/fan rotation.

   Stand clear of exhaust to avoid personal injury.

   Do not interchange a power lead with the ground wire. Severe personal injury and/or property damage may result.
3. All access panels should be sealed and secure.
4. Check that the dust container is properly sealed and clamped.
5. Check and remove all loose items in or near the inlet and outlet of the collector.
6. Check that all remote controls and solenoid enclosures (if applicable) are properly wired and all service switches are in the OFF position.
7. Check that all optional accessories are installed properly and secured.
8. Turn power ON at source.
9. Turn fan motor ON.
10. Adjust airflow with the exhaust damper.

NOTICE Excess airflow can shorten filter life, cause electrical system failure and fan motor failure.

Typical Start-Up Sequence

Press the Start button on the controller panel to start the collector.

Typical Shut-Down Sequence

1. Press the Clean button on the controller.
2. The fan stops when fan run-down cycle is complete.
3. The cleaning cycle starts and when finished, the collector turns OFF.

Maintenance Information

Instruct all personnel on safe use and maintenance procedures.

CAUTION Use proper equipment and adopt all safety precautions needed for servicing equipment.

Use appropriate access equipment and procedures. Note the standard collector is not equipped with access platforms unless noted on the specification drawings.

Electrical service or maintenance work must be performed by a qualified electrician and comply with all applicable national and local codes.

Turn power off and lock out all power before performing service or maintenance work.

Do not install in classified hazardous atmospheres without an enclosure rated for the application.

Operational Checklist

1. Monitor the physical condition of the collector and repair or replace any damaged components.

   Routine inspections will minimize downtime and maintain optimum system performance. This is particularly important on continuous-duty applications.
2. Monitor pressure drop across filters.

   Abnormal changes in pressure drop may indicate a change in operating conditions and possibly a fault to be corrected.
3. Monitor exhaust.
4. Monitor dust disposal.

Filter Removal and Installation

CAUTION Use proper safety and protective equipment when removing contaminants and filters.

Dirty filters may be heavier than they appear.

Use care when removing filters to avoid personal injury and/or property damage.

Turn power off and lock out all power before performing service or maintenance work.

Do not operate with missing or damaged filters.

Filter Removal

1. Turn power to collector OFF. Open or remove the filter access door.

   Lower the retention handles in the bag chamber (for UMA 40 model size, loosen wing nuts on top of clean air plenum until filter frame releases from seal gasket).
3. Slowly remove the filter frame assembly from the collector.

   Note: This may require two people.
4. Remove filter inserts and filter bags. Check for broken or worn inserts especially at any areas of filter bag damage and dispose of properly. Replace any missing or damaged filter inserts.
5. Remove any dust or debris from the dirty-side tubesheet gasket.

Filter Installation

1. Insert the filter bag into the filter frame placing individual filter pockets between the locating bars and fold filter bag collar over the top flange.
2. Place insert edging around sides and bottom edges of each filter insert.
3. Insert one filter insert into each filter bag pocket.

4. Set filter frame on guide and slowly slide assembly into collector until the bottom edge of the filter bags contact ths shaker bar.

   Note: Insertion must be in-line with the frame guide. Inserting at an angle could potentially tear the tubesheet seal.

5. Insert bag pockets into the shaker bar slots.
6. Push the filter assembly the remaining distance into the collector and check that all pockets are firmly seated in the shaker bar.
7. Lift retention handles (for UMA 40 model size, tighten wing nuts).
8. Replace or close the filter access door and secure.
9. Return power to the collector and resume operation.

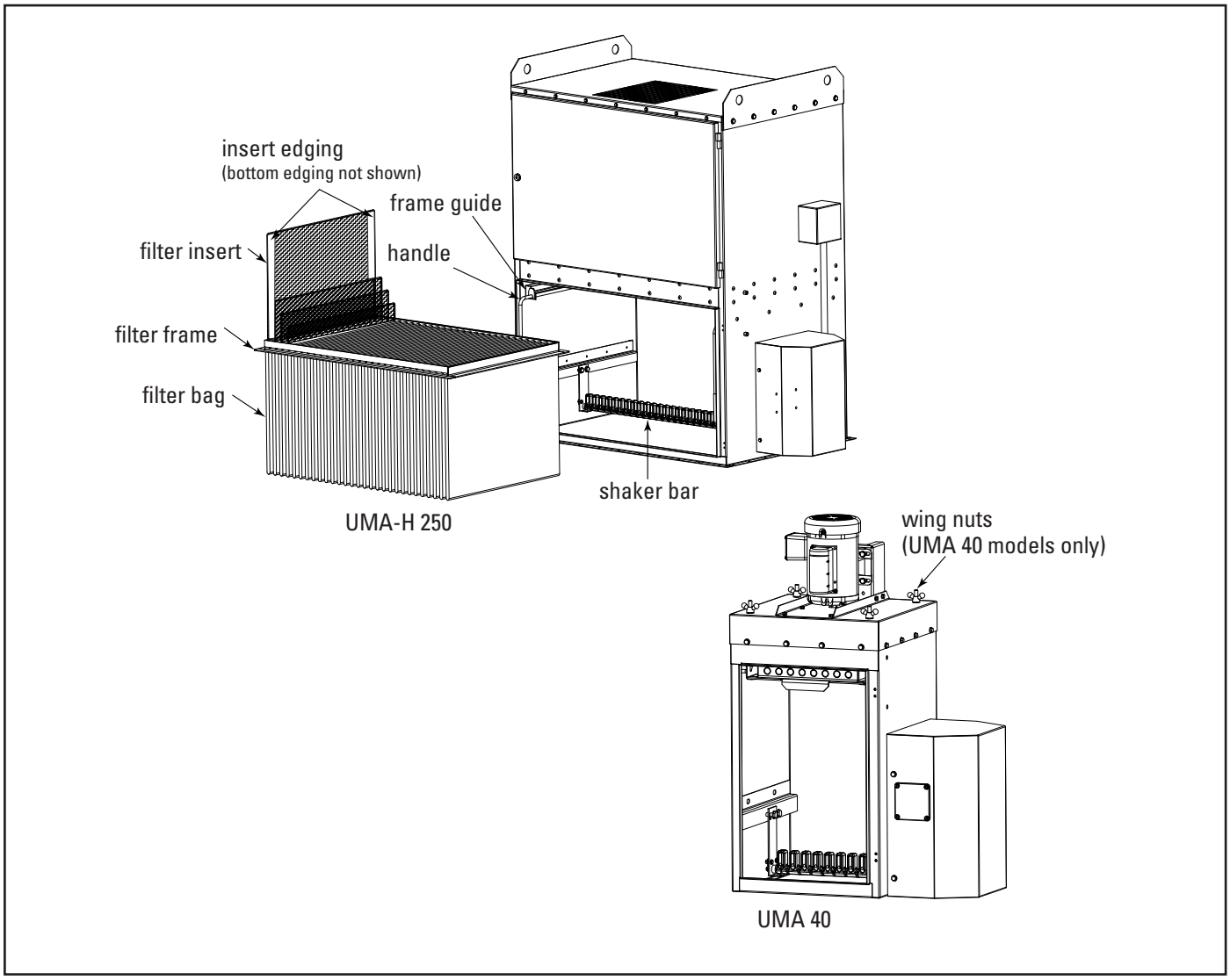

Filter Removal and Installation

Optional Equipment

Magnehelic® Gauge

The Magnehelic is a differential pressure gauge used to measure the pressure difference between the clean-air and dirty-air plenums and provides a visual display of filter change requirements. The high-pressure tap is located in the dirty-air plenum and the low-pressure tap is located in the clean-air plenum.

1. Choose a convenient, accessible location on or near the collector for mounting that provides the best visual advantage.
2. Plug the pressure ports on the back of the gauge using two, 1/8-in NPT pipe plugs supplied. Install two, 1/8-in NPT male adapters supplied with the gauge into the high- and low-pressure ports on the side of the gauges.
3. Attach the mounting bracket using three, #6-32 x 1/4-in screws supplied.
4. Mount the gauge and bracket assembly to the supporting structure using two, self-drilling screws.
5. Thirty-five feet of plastic tubing is supplied and must be cut in two sections. Connect one section of tubing from the gauge's high-pressure port to the pressure fitting located in the dirty-air plenum. Connect remaining tubing from the gauge's low-pressure port to the fitting in the clean-air plenum. Additional tubing can be ordered from your representative.
6. Zero and maintain the gauge as directed in the manufacturer's Operating and Maintenance Instructions provided.

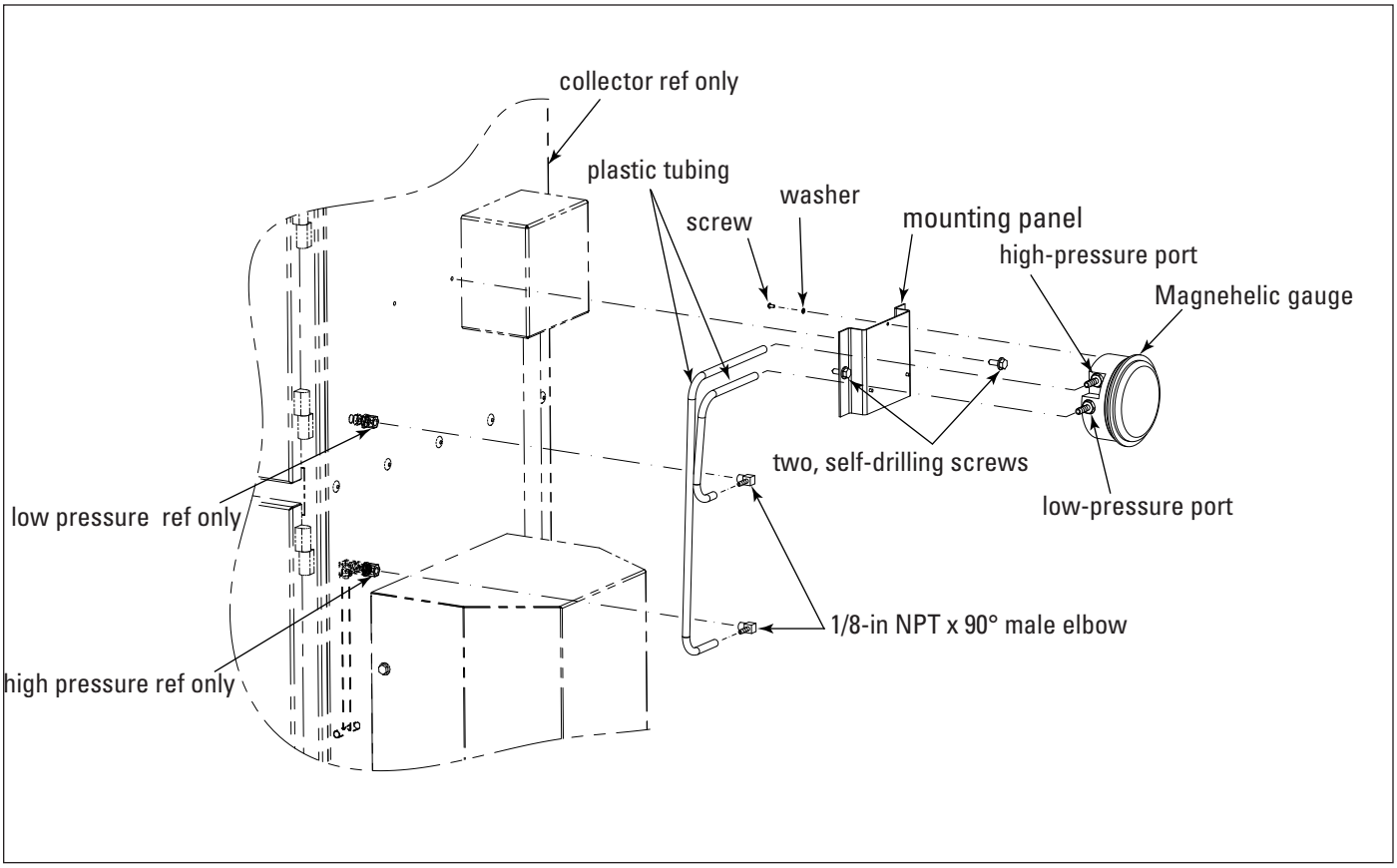

Magnehelic Gauge Installation

Caster Base

An optional caster base is available for UMA Models 40 to 250.

⚠ CAUTION The optional caster base is not suitable for use on any UMA equipped with explosion relief panels.

Static Bonding for Filters

Optional media bonding and grounding components are available for UMA collectors equipped with antistatic filter bags.

1. If the collector is ordered with antistatic filter bags, the grounding lug and internal components are factory installed.
2. Connect the grounding lug to ground.

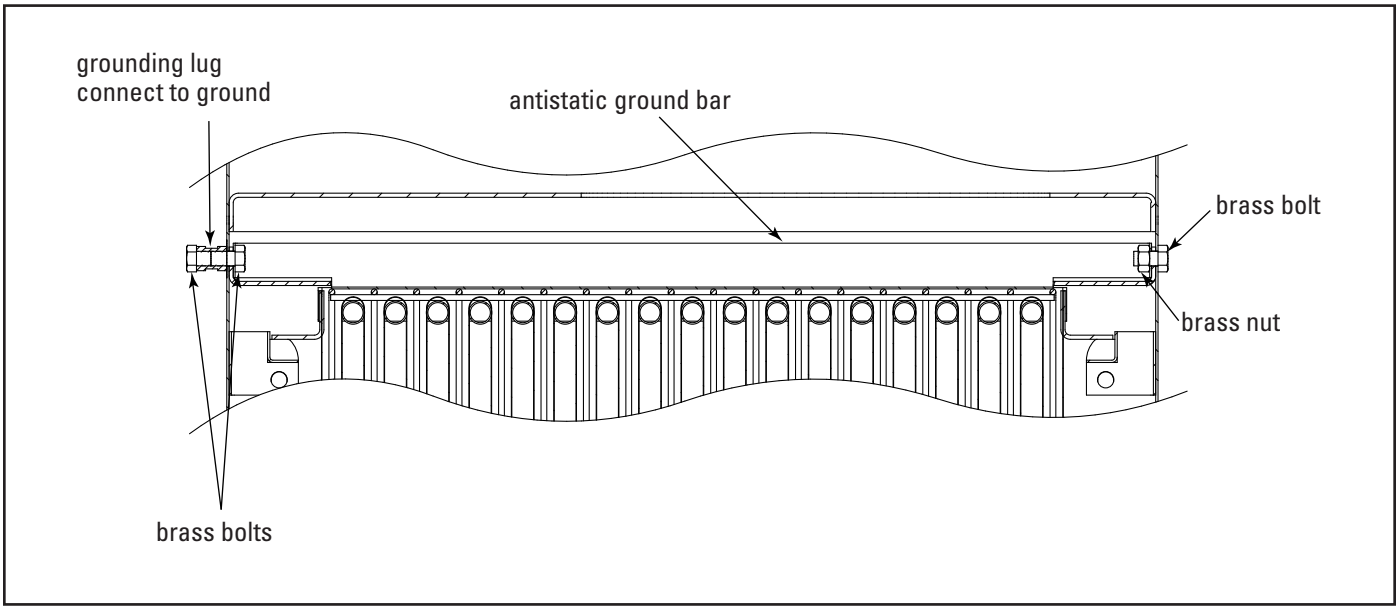

Static Grounding

Explosion Vent

CAUTION Personal injury, death, and/or property damage can result from material discharge during venting.

The material discharged during the venting of an explosion must be safely directed outdoors away from areas occupied by personnel to reduce risk of personal injury and/or property damage.

The risk of personal injury and/or property damage can be minimized or avoided by locating vented equipment outside buildings and away from normally occupied areas.

Explosion vents should be inspected regularly to confirm physical and operational condition. Replace any damaged parts immediately.

Standard explosion vents are intended for outdoor installations only.

Unless otherwise noted, the explosion venting calculations are based on formulas from NFPA-68 for outdoor applications only, with no duct or obstructions on the explosion vent panel.

Contact Donaldson Torit for assistance in calculating specific venting requirements for equipment.

NFPA 68 can provide guidance on both the frequency of and appropriate details for inspections.

Troubleshooting

Problem	Probable Cause	Remedy
Fan blower and motor do not start	Improper motor wire size	Rewire using the correct wire gauge as specified by national and local codes.
	Not wired correctly	Check and correct motor wiring for supply voltage. See motor manufacturer's wiring diagram. Follow wiring diagram and the National Electric Code.
	Power supply circuit	Check power supply to motor circuit on all leads.
	Power supply circuit down	Check power supply circuit for proper voltage. Check for fuse or circuit breaker fault. Replace as necessary.
	Damaged motor	Replace damaged motor.
Partial loss of suction	Filters plugged	Check that the dust container is not full. Turn fan OFF and allow the controller to perform several complete cleaning cycles. Replace filter bags.
	Motor speed low	Check all supply voltage, phase, and motor connections.
	Fan rotation backward	Check and correct. See Preliminary Start-Up.
Total loss of suction	Blower motor stopped	Check motor starter overloads, fuses, and interlocks. Check motor connections.
	Filters plugged	Check that the dust container is not full. Turn fan OFF and allow the controller to perform several complete cleaning cycles. Replace filter bags.
	Obstructed ductwork	Check and remove obstructions.
Clean-air outlet discharging dust	Filters not installed correctly	See Filter Installation.
	Filter damage, dents in the end caps, gasket damage, or holes in media	Replace filters as necessary. Use only genuine Donaldson replacement parts. See Filter Installation.

Product Information (Process Owner to complete and retain for your records)

Model Number _____ Serial Number _____

Ship Date _____ Installation Date _____

Filter Type _____

Collected Dust _____

Dust Properties: Kst_____ Pmax _____ MIE _____ MEC _____

Accessories _____

Other_____

_____

Service Notes

Date	Service Performed	Notes

Donaldson Industrial Air Filtration Warranty

Donaldson warrants to the original purchaser only that the Goods will be free from defects in material and manufacture for the applicable time periods stated below: (1) Major structural components for a period of ten (10) years from the date of shipment; (2) Non-Structural, Donaldson-built components and accessories including Donaldson Airlocks, TBI Fans, TRB Fans, Fume Collector products, Donaldson built electrical control components, and Donaldson-built Afterfilter housings for a period of twelve (12) months from date of shipment; and (3) Donaldson-built filter elements for a period of eighteen (18) months from date of shipment.

Buyer is solely responsible for determining if goods fit Buyer's particular purpose and are suitable for Buyer's process and application. Seller's statements, engineering and technical information, and recommendations are provided for the Buyer's convenience and the accuracy or completeness thereof is not warranted. If, after Seller receives written notice, within the warranty period, that any goods allegedly do not meet Seller's warranty, and Seller, in its sole discretion, determines that such claim is valid, Seller's sole obligation and Buyer's exclusive remedy for breach of the foregoing warranty or any Seller published warranty, will be, at Seller's option, either: (i) repair or replacement of such goods or (ii) credit or refund to Buyer for the purchase price from Seller. In the case of repair or replacement, Seller will be responsible for the cost of shipping the parts but not for labor to remove, repair, replace or reinstall the allegedly defective goods. Refurbished goods may be used to repair or replace the goods and the warranty on such repaired or replaced goods shall be the balance of the warranty remaining on the goods which were repaired or replaced. Any repair or rework made by anyone other than Seller is not permitted without prior written authorization by Seller, and voids the warranty set forth herein. Seller warrants to Buyer that it will perform services in accordance with the Sales Documents using personnel of required skill, experience and qualifications and in a professional and workmanlike manner in accordance with generally recognized industry standards for similar services. With respect to any services subject to a claim under the warranty set forth above, Seller shall, in its sole discretion, (i) repair or re-perform the applicable services or (ii) credit or refund the price of such services at the pro rata contract rate and such shall be Seller's sole obligation and the exclusive remedy for breach of the foregoing warranty on services. Products manufactured by a third party ("Third Party Product") may constitute, contain, be contained in, incorporated into, attached to or packaged together with, the goods. Buyer agrees that: (a) Third Party Products are excluded from Seller's warranty in this Section 7 and carry only the warranty extended by the original manufacturer, and (b) Seller's liability in all cases is limited to goods of Seller's design and manufacture only. EXCEPT FOR SELLER'S WARRANTY OF TITLE TO THE GOODS, SELLER EXPRESSLY DISCLAIMS AND EXCLUDES ALL OTHER WARRANTIES WHATSOEVER, WHETHER, EXPRESSED OR IMPLIED, ORAL, STATUTORY, OR OTHERWISE, INCLUDING BUT NOT LIMITED TO MERCHANTABILITY, FITNESS FOR A PARTICULAR PURPOSE, NON-INFRINGEMENT OF THIRD PARTY INTELLECTUAL PROPERTY AND ANY WARRANTIES ARISING FROM TECHNICAL ADVICE OR RECOMMENDATIONS, COURSE OF DEALING OR OF PERFORMANCE, CUSTOM OR USAGE OF TRADE. Seller's obligations do not cover normal wear and tear or deterioration, defects in or damage to any goods resulting from improper installation, accident or any utilization, maintenance, repair or modification of the goods, or any use that is inconsistent with Seller's instructions as to the storage, installation, commissioning or use of the goods or the designed capabilities of the goods or that, in its sole judgment, the performance or reliability thereof is adversely affected thereby, or which is subjected to abuse, mishandling, misuse or neglect or any damage caused by connections, interfacing or use in unforeseen or unintended environments or any other cause not the sole fault of Seller, and shall be at Buyer's expense. Seller's warranty is contingent upon the accuracy of all information provided by Buyer. Any changes to or inaccuracies in any information or data provided by Buyer voids this warranty. Seller does not warrant that the operation of the goods will be uninterrupted or error-free, that the functions of the goods will meet Buyer's or its customer's requirements unless specifically agreed to, or that the goods will operate in combination with other products selected by Buyer or Buyer's customer for its use.

The terms of this warranty may only be modified by a special warranty document signed by a Director, General Manager or Vice President of Donaldson. To ensure proper operational performance of your equipment, use only genuine Donaldson replacement parts.

This Product is provided subject to and conditioned upon Donaldson's Terms of Sale ("Terms"), a current copy of which is located at termsofsale.donaldson.com. These Terms are incorporated herein by reference. By purchasing or using this Product, the user accepts these Terms. The Terms are available on our website or by calling our customer service line at 1-800-365-1331.

Significantly improve the performance of your collector with genuine Donaldson Torit replacement filters and parts. **Call Donaldson Torit at 800-365-1331.**

Important Notice
Many factors beyond the control of Donaldson can affect the use and performance of Donaldson products in a particular application, including the conditions under which the product is used. Since these factors are uniquely within the user's knowledge and control, it is essential the user evaluate the products to determine whether the product is fit for the particular purpose and suitable for the user's application. All products, product specifications, availability and data are subject to change without notice, and may vary by region or country.

Donaldson Company, Inc.
Minneapolis, MN

donaldsontorit.com • shop.donaldson.com

North America
Email: donaldsontorit@donaldson.com
Phone: (USA): 800-365-1331 • (MX): 800-343-3639

Australasia
Email: marketing.australia@donaldson.com
Phone: +61 2 4350 2000
Toll Free: (AU) 1800 345 837 • (NZ) 0800 743 387

China IAF
Email: info.cn@donaldson.com
Phone: (86) 400-820-1038

Donaldson Europe B.V.B.A.
Email: IAF-europe@donaldson.com
Phone: + 32 (0) 16 38 38 11

India
Email: marketing.India@donaldson.com
Phone: +91 124 4807400
Toll Free: 18001035018

Latinoamerica
Email: IndustrialAir@donaldson.com
Phone: +52 449 300 2442

South Africa
Email: SAMarketing@donaldson.com
Phone: +27 11 997 6000

Southeast Asia IAF
Email: IAF.SEA@donaldson.com
Phone: (65) 63117373

IOM AD3547701 ENG, Revision 4 (October 2018) ©2003-2018 Donaldson Company, Inc.
Donaldson, Torit, Unimaster and the color blue are marks of Donaldson Company, Inc. All other marks belong to their respective owners.