INSTALLATION, OPERATION AND MAINTENANCE MANUAL

High Vacuum Dust Collector

Series DCE HV500 (from February 2007)

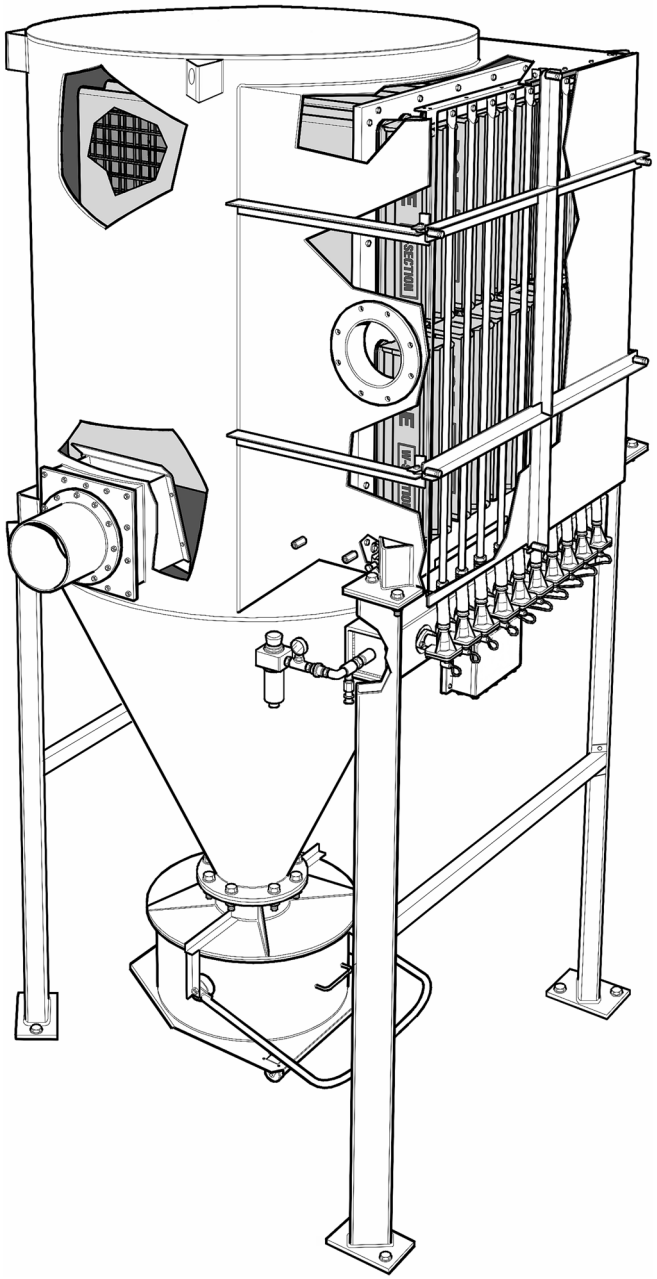

CONTENTS

GENERAL SAFETY REQUIREMENTS 4
Applications having a risk of sparks and fires 6
INSTALLATION 8
General guidance to lifting 8
Lifting collector to vertical position 8
Compressed air requirements 10
Controller 10
Exhauster motor 11
Overload protection 11
Interlocks 11
Antistatic earthing 11
EEx controls 12
Explosion relief 12
Pressure balance connection 12
Commissioning check list 13
COMMISSIONING 14
Commissioning check list 14
Start-up sequence 14
Shut-down sequence 15
OPERATION 16
Principle of operation 16
MAINTENANCE 17
Routine inspection 17
Servicing schedule 19
SPECIFICATION 23
Description and range 23
Construction 24
SPARE PARTS 29
DECLARATION OF CONFORMITY A1

GENERAL SAFETY REQUIREMENTS

This manual contains specific precautionary statements relative to worker safety in appropriate sections. To avoid dangerous situations we give you the following advice:

Refers to special information on how to use the dust collector most efficiently.

Refers to special information directed towards preventing damage.

Refers to special information designed to prevent injury or extensive damage.

The collector should be stored as supplied. Only remove packaging to install. For the purposes of storage:

- *Collector with specification for inside use = IP50*
- *Collector with specification for outside use = IP54*

The dust collector should be used only when it is in a technically acceptable condition. Regular maintenance, as set out in this manual, is required to minimise technical failure. Third party supplied components (for example motors) should be maintained according to the manufacturer's instructions.

You should ensure any persons carrying out work on the supplied equipment follow any relevant recognised standards/codes and are competent to do so. Areas requiring a competent person include:

- *Maintenance on any component identified as a potential ignition source.*
- *Lifting and erection.*
- *Electrical installation, inspection and maintenance work.*
- *Pneumatic installation, inspection and maintenance work.*
- *Any access to internal classified potentially explosive atmospheres where there may be a risk due to explosion.*

During assembly/installation or dismantling of equipment, potential ignition sources may occur that were not considered in the risk assessment of the unit in operation (for example, grinding, welding sparks, etc.)

You should use the dust collector in full accordance with the conditions set out in the Order Acknowledgment and relevant Scope of Delivery. Failure to do so may compromise product reliability, warranty and safety. The Scope of Delivery is an integral part of the manual.

Other items of equipment, not supplied under the Scope of Delivery from Donaldson, should be installed, operated and maintained according to the documentation supplied with the respective equipment.

Any modification carried out on the 'as supplied' equipment may reduce reliability and safety, and will nullify warranty; such actions fall outside the responsibility of the original supplier.

Where necessary for safety, the dust collector is fitted with fixed guards. Removal of these guards and any subsequent work should only be carried out after adequate precaution is taken to ensure it is safe to do so. All guards should be refitted before re-energising.

Compressed air is recommended for collectors that operate using reverse jet cleaning. Alternative gases should be assessed before use to ensure that explosive atmospheres are not introduced during media cleaning.

Where the equipment supplied is suitable for working within a potentially explosive atmosphere (as defined by Directive 2014/34/EU) it will be according to the categories and conditions marked on the collector serial nameplate. You should ensure the equipment supplied by others is also suitable. If no marking is given on the serial nameplate then the supplied equipment is not suitable for use in potentially explosive atmospheres.

Care should be taken to ensure that any potentially explosive atmosphere is not present when performing operations that increase the risk of ignition (opening of controller for adjustment or electrical repair for example). Ensure the installation is always returned to its original state.

Where the dust being processed can ignite due to exothermic reaction, including self ignition, the collector MUST be fitted with a suitable explosion protection method (venting for example). The risk of ignition can be minimised by avoiding the accumulation of dust layers with regular cleaning.

The dust collector may be fitted with explosion protection in the form of a vent panel. Precautions, as set out in the Scope of Delivery, are used to minimise the risk of ignition of any dust clouds contained within the dust collector. The possibility of other ignition sources being introduced into the collector during periods where any dust cloud may be present should be minimised. Particular care should be taken to avoid introducing glowing particles via the collector inlet ducting.

The explosion relief assembly, where fitted, has been designed to provide adequate safety from an explosion initiated from within the collector, for the given dust explosion characteristics and collector arrangement as set out in the Scope of Delivery. You should ensure that explosions are not allowed to propagate into the dust collector (using suitable isolation devices) since pressures may be generated leading to unsafe equipment rupture.

Where applicable, equipment connected to the dust collector (for example, a cyclone) should be protected, using suitable isolation devices, against the transfer of flame and pressure if, in the event of an explosion initiating inside the dust collector, the connected equipment is not capable of safely withstanding these effects.

The explosion relief assembly, where fitted to the dust collector, is not suitable for use with dusts that are classified as poisonous, corrosive, irritant, carcinogenic, teratogenic or multigenic unless the dust released during the explosion venting process can be contained to a safe level.

Where applicable, care is required when siting the dust collector to ensure that the effects (flame, pressure, noise and fire) produced during and after the explosion venting process do not put at risk personnel and nearby plant.

In order to ensure the required venting efficiency is maintained, the explosion relief assembly, if fitted to the collector, should not be obstructed in any way.

It may be necessary to provide a facility to shut down the equipment in the event of an explosion (where collectors are fitted with explosion relief panels). The signal should be taken from the bursting panel detection device.

Applications having a risk of sparks and fires

1. Good Housekeeping

Accumulation of potentially combustible dust, for example dust layers is considered a potential ignition source. Failure to keep the dust collector clean and empty the hopper / dust bins regularly will increase the risk of fires and/or explosions.

2. EU Directive 99/92/EC

A reinforced and/or vented dust collector must be used when handling dusts that have the potential to form an explosive atmosphere. If a non-reinforced and/or non vented dust collected is used on these applications then the end user must ensure an equivalent, secure, and fool proof basis of safety, which must be clearly documented in the end users Explosion Protection Document in line with Article 8 of EU Directive 99/92/EC.

3. Self Heating Materials

Please note that some materials have the potential to self generate heat and hence to become an ignition source, that could result in a fire and / or an explosion. For this reason ferrous and non-ferrous materials should not be extracted in to the same dust collector, as when combined they can create a violent thermite reaction that would ignite a fire and/or explosion.

4. Applications having a risk of sparks and fires

Where sparks are generated by the process, this must be considered as a potential ignition source which increases the risk of a fire or explosion. The filter can be supplied with an optional spark trap to help reduce the frequency of spark ignition and should be regarded as part of a risk reducing strategy.

The spark trap is not an extinguishment system and should never be relied upon to achieve spark eradication in processes where suppression requirements are absolute. The spark trap does not guarantee complete elimination of sparks and does not preclude the possibility of fire or explosion. Therefore, system redundancy and complementary measures should be taken in conjunction with the spark trap to further reduce the risk of fire and explosion from sparks in applications where there is potential for catastrophic combustion.

On these types of applications the enduser should carry out regular good housekeeping, such as:

- Periodically check for dust fall out in ducting and remove.
- Pulse down off line regularly to minimise retention of dust cake on filter cartridges.
- Empty dust bins frequently.

Other risk reducing strategies could include:

- Inject with an inert material.
- Consider additional spark detection and fire suppression equipment.

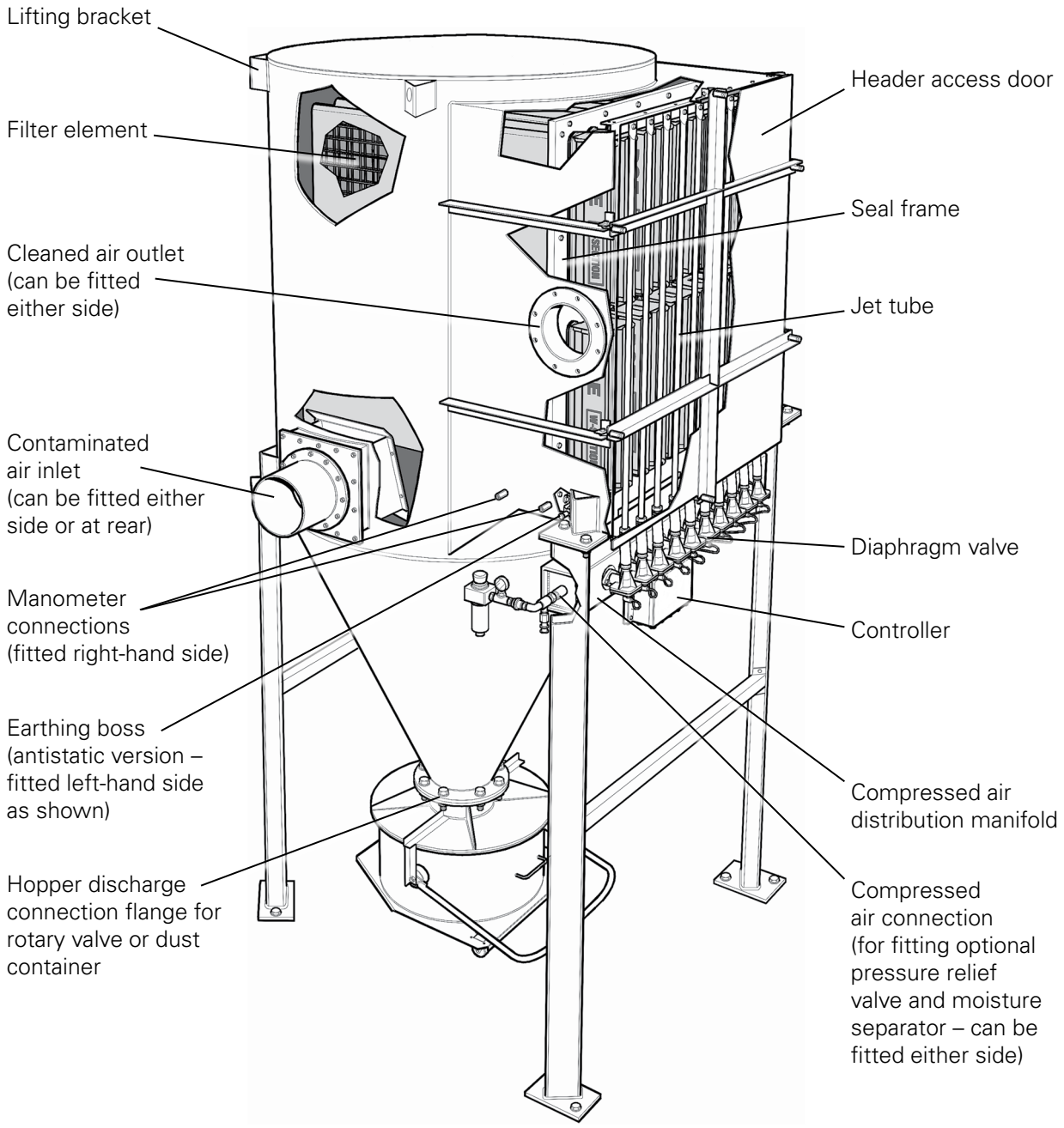

FIGURE 1: DCE HV500 dust collector

INSTALLATION

Where equipment is installed in a Potentially Explosive Atmosphere, care should be taken not to locate or use the collector where external ignition sources can be introduced, for example stray electric currents, lightening, electromagnetic waves, ionising radiation, ultrasonic waves.

General guidance to lifting

All assemblies should be lifted using two-point lifting unless stated otherwise in the text.

Chains or slings should be used with an adequate SWL (Safe Working Load). (Refer to lifting label located adjacent to lifting bracket for weight of equipment supplied by Donaldson).

Chains must be long enough to ensure that the included angle between diagonal chains is not greater than 90°.

Ideally the chains should be adjusted to give a horizontal lift. If the chain lengths are not adjusted the equipment will hang at an angle but can still be lifted safely.

The lifting brackets should only be used to lift the equipment as supplied. i.e. not with any ancillary equipment fitted.

Lifting collector to vertical position

Once the DCE HV500 Series collector has been placed on the floor in a horizontal position it can then be two-point lifted, using the lifting points provided, into a vertical position (figure 2 and figure 3).

Supporting legs, bracings and, when required, adaptors for collectors with dust container are supplied separately.

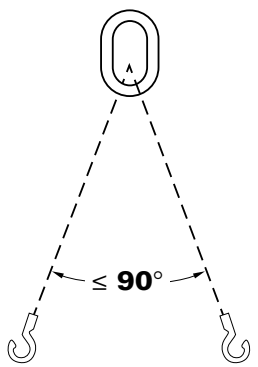

FIGURE 2: Two-point lifting arrangement

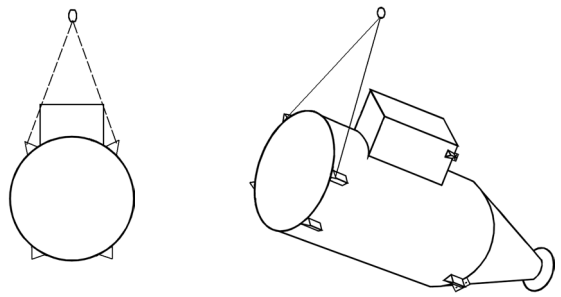

FIGURE 3: Two-point lifting from horizontal to vertical position

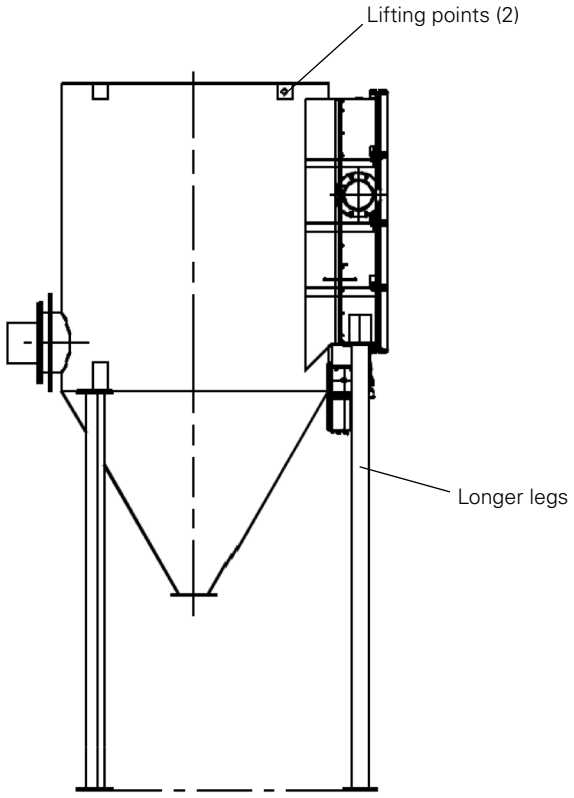

FIGURE 4: Lifting from vertical position

Whilst slung in a vertical position the legs provided should be bolted into position on the vessel (the longer legs are attached to the clean air chamber) and then the bracings fitted to the front and rear legs (figure 4).

The collector can now be manoeuvred into position.

Line up both horizontally and vertically using shims under the feet where required.

Drill through the feet holes and insert and tighten M16 expandable bolts.

Compressed air requirements

DCE HV500 Series dust collectors require an independent supply of clean, dry, oil-free compressed air. Details of atmospheric pressure and quantity are given in Table 3 (refer to 'Specification' section). A design label is also attached to each manifold. Where an existing factory mains system is to be used it may be necessary to install an additional moisture separator in the supply line to the collector. If a compressor is being installed to supply the DCE HV500, then the following conditions should be observed as far as possible:

Type of compressor

Use a compressor of ample capacity – an overloaded compressor may produce excessively contaminated, moisture-laden air.

Location of air intake

Avoid locating the air intake in an excessively polluted area and install an adequate air intake filter.

Layout and installation of air lines

A suitable dryer should be installed in the compressed air line to remove excess moisture. However, in smaller installations a long run (min. 10m) of piping can be used, to act as a cooler, with a moisture separator. For further details see Table 3. The piping should be installed to provide a fall in the direction of air flow to assist in the drainage of accumulated moisture. A moisture separator should be provided at the lowest point of the installation.

Pressure relief

The manifold has a maximum operating pressure of 6.2 bar (see Table 5 in 'Specifications' section). It is a requirement that adequate precaution is taken to avoid exceeding this pressure. Where a relief valve is supplied by Donaldson this device has a relief rating of 17 dm^3/s at 6.9 bar. Extra system relief will be required if the connected supply can exceed this.

Controller

It is a requirement of the Supply of Machinery (Safety) Regulations 1992 to provide adequate isolation and emergency stop facilities. Due to the varied nature of site installations this cannot be provided by Donaldson but instead is the responsibility of the customer.

Always isolate power before opening the controller.

Each DCE HV500 dust collector is supplied with a factory fitted C-controller to operate the reverse jet cleaning system.

DCE HV F504, F506 and F508: 3-way controller

DCE HV F510, F514 and F520: 5-way controller

DCE HV F530, F538 and F545: 10-way controller

DCE HV C508 and C510: 2-way controller

DCE HV C516, C520 and C540: 4-way controller

DCE HV C524, C530 and C548: 6-way controller

For C-Controller connections and set-up, refer to C-Controller manual.

Exhauster motor

The exhauster motor used in conjunction with the DCE HV500 dust collector will need to be wired to a suitable control panel for the type of motor installed. This control panel should be designed in such a way to comply with local legislation for electrical installations. See also sections on 'Overload protection' and 'Interlocks'.

Overload protection

All feeder circuits should be adequately protected with suitably-rated fuses and contactors with integral overload protection.

Interlocks

Auxiliary discharge equipment such as belt feeders, rotary valve or screw conveyor should be separately controlled but interlocked with the dust collector controller.

The design of the electrical circuitry controlling equipment associated with the DCE HV500 collector should be such that breakdown of any one of the associated pieces of equipment does not cause a complete blockage of the collector. For example, should the motor of the rotary valve fitted to the collector cease to function, the collector housing will gradually fill with dust until completely choked. Failure of the compressor could also cause a similar blockage.

It is therefore important that the starters of all ancillary equipment be interlocked to ensure:

1. Correct starting sequence;
2. Operation of a warning system, or alternatively stoppage of the entire installation in the event of a failure of any of the auxiliary motors;
3. Correct stopping sequence.

For more detailed information, please consult your wiring diagram that was delivered with your powerbox.

It may be necessary to provide a facility to shut down the equipment in the event of an explosion (where collectors are fitted with explosion relief panels). The signal should be taken from the explosion relief detection device.

Antistatic earthing

It is particularly important on collectors having antistatic features and/or explosion relief, that the earthing post (located adjacent to the symbol, shown below) is properly connected to earth, using the brass screw provided, to prevent any static build-up (reference – figure 1).

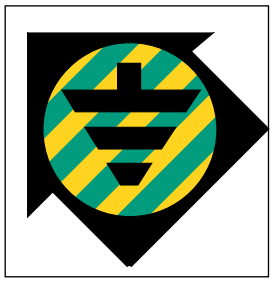

Explosion relief

When a collector requiring antistatic features is also fitted with rear or top explosion relief the bursting panel must also be earthed (figure 5). This is the responsibility of the customer.

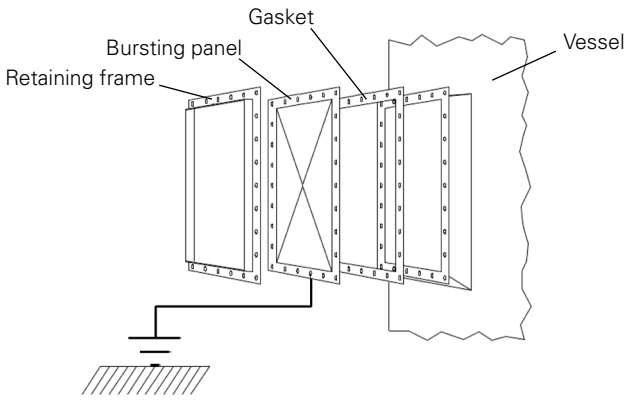

FIGURE 5: Antistatic earthing (explosion relief)

EEx controls

When the dust collector is to be installed in a hazardous area, where there is a risk of fire or explosion, the collector will be marked for the area(s) it can be safely used within (refer to collector serial nameplate). In some instances the collector may be fitted with either of the following control systems:

- **EExd solenoids and remote controller**

  When this option is fitted, the dust collector has its solenoid valves in an EExd IIb T6 enclosure mounted on to the collector body. A controller, housed in an IP66 box, is supplied loose. This must be installed in a safe area and connected to the solenoid valves on the dust collector using suitable cabling (not supplied).

  It is recommended that cable with a core size of 2.5mm² is used.

  The maximum length of cabling that can be used is 100m.

  Instructions for setting up the controller are the same as those for the standard controller.

- **PT controller**

  The PT controller is a pneumatically operated device which operates the diaphragm valves in sequence, therefore an electrical supply is not required.

  The controller is supplied complete with air regulator and is normally mounted below the compressed air manifold.

  For PT controller connections and set-up, refer to Publication 2697.

Explosion relief

Explosion panels, if fitted, must be relieved to a safe area in accordance with Factory Inspectorate recommendations.

Pressure balance connection

An optional pressure balance connection is available between the front underside of the header (clean side) and the dust container.

The plastic liner must be fitted in the dust container before operating the collector.

Dust containers are of heavy duty construction, supplied on castors for ease of handling. Full plastic liners may be of considerable weight depending of the type of dust being collected and therefore consideration should be made to the safe working load for lifting.

Commissioning check list

- ☐ Ensure the HV500 collector is securely bolted to the floor.
- ☐ Ensure compressed air supply is installed correctly and free from leaks.
- ☐ Ensure electrical supply is installed correctly and complies to local legislation.

COMMISSIONING

It is a requirement of the Supply of Machinery (Safety) Regulations 1992 to provide adequate isolation and emergency stop facilities. Due to the varied nature of site installations this cannot be provided by Donaldson but instead is the responsibility of the customer.

When making your preliminary checks, or during the start-up sequence, particularly note that on collectors fitted with an explosion relief assembly the cleaning system should not be operated on its own for longer than necessary as the positive pressure produced could weaken the bursting panel.

Commissioning check list

- ☐ Ensure the HV500 collector is securely bolted to the floor.
- ☐ Ensure all ducting is complete and all detachable panels are in position.
- ☐ Ensure all door seals are intact on the collector, then close and secure the doors.
- ☐ Ensure collectors fitted with antistatic filter elements and/or explosion relief are suitably earthed.
- ☐ Where fitted, ensure explosion relief panels are venting to a safe area.
- ☐ Ensure controller is connected to the correct voltage and that the pulse interval and duration settings are correct. For 24V DC ensure polarity is correct. It is essential that the controller is earthed for both AC and DC connections.
- ☐ Ensure electric power is available.
- ☐ Ensure the compressed air manifold has sufficient protection for over-pressure.
- ☐ Start the compressor and check that the air supply is maintained at the recommended pressure.
- ☐ If applicable, start up the discharge equipment (e.g. Screw conveyor, rotary valve, Belt feeders etc.).
- ☐ Switch on the controller and check that all valves operate in sequence by 'feeling' pulses in rubber hoses (look and listen for exhaust pulses). As each valve operates, the air pressure reading should drop to approximately 50% of the initial setting and then return to the initial value.
- ☐ Start up the main exhauster/blower and equipment being served.
- ☐ Verify operation of the interlocks and audible warning system, if fitted.

If any of the above check boxes are not ticked, then the reasons why should be investigated. (Refer to fault location table in 'Maintenance' section).

Start-up sequence

Having completed all the necessary checks, the equipment may be put into operation. A typical installation should be started up as follows:

1. Start up compressed air supply.
2. Set the equipment being served, if applicable, in motion.
3. Switch on controller.
4. Start exhauster/blower.

Shut-down sequence

At the end of any period of operation it is important that all residual deposits are cleared from the filter elements, collector body, discharge hopper and equipment being served. To achieve this, equipment should be shut down in the following order:

1. Stop main exhauster/blower only, leaving controller and compressed air supply switched on to allow the collector to be cleaned 'off-line'.

   To enable off-line cleaning, refer to controller manual.

   This procedure is not recommended where an explosion relief assembly is fitted, as damage could result to the bursting panel. In such cases consult with Donaldson.

2. After 10-15 minutes, switch off controller and compressor but leave discharge equipment running to ensure that it is emptied.
3. After a further 5 minutes, switch off the discharge equipment if applicable.

Where the dust being handled has self-heating properties, it is important to remove any deposits in the dust container to reduce the risk of an explosion.

Adherence to the above procedure will ensure that a DCE HV500 collector installation is maintained at optimum efficiency.

OPERATION

Principle of operation

Dust-laden air is ducted into the chamber containing the filter elements where it collects on their outer surfaces. A layer of dust builds up on the outside of the elements as the air itself penetrates the media (figure 6a). The clean air emerges from the outlet header of each filter element into the cleaned air chamber and from there it is discharged through the header outlet.

At regular intervals, governed by the controller, each element in turn receives a short burst of compressed air from its respective jet tube (figure 6b). The jet tube has a series of small-diameter jet orifices positioned adjacent to the outlet header of each filter element (figure 6, figure 9 and figure 10). These orifices are of an optimum size and distance from the filter element, ensuring that a large volume of air is induced by each injection of compressed air. This causes a brief, powerful reversal of airflow through the filter element, effectively dislodging the dust layer which then falls into the discharge hopper.

In this way the pressure drop across the whole filter is kept at a virtually constant level, enabling the DCE HV500 to operate continuously, twenty-four hours a day.

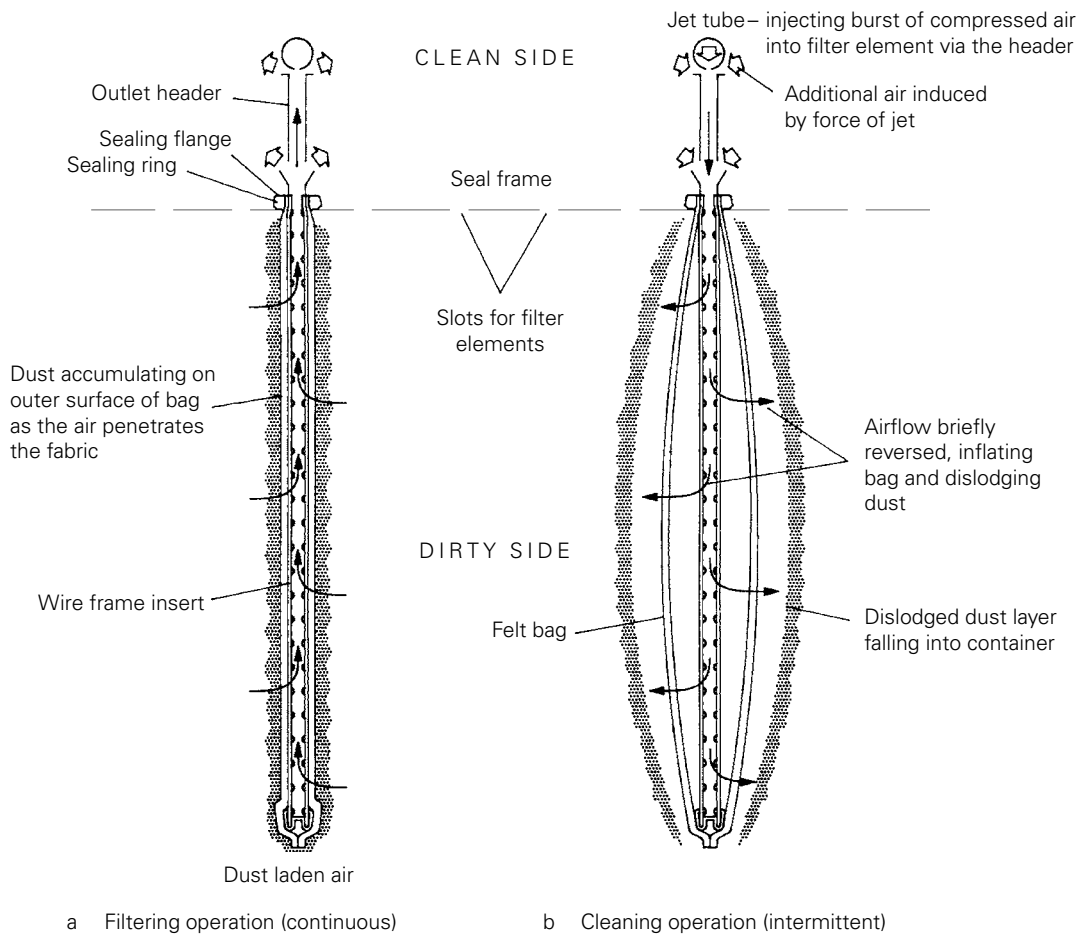

FIGURE 6: Section through seal frame and two filter elements, showing principle of operation (Fabric filter element illustrated)

MAINTENANCE

A platform should be used when carrying out maintenance where the position of the technician's feet is greater or equal to 2 metres above ground level.

Before any work is carried out, ensure the equipment is adequately isolated.

Ensure the pneumatic system is fully isolated and depressurised before any work is carried out.

For ancillary equipment not manufactured by Donaldson, refer to manufacturer's instructions.

If it is unavoidable to work on the equipment while a potentially explosive atmosphere is present, care should be taken to avoid introducing ignition sources not present during expected operation. Non-sparking tools should be used.

Access to the dirty air chamber of the equipment may create risks and hazards that under normal circumstances are not present and as such this work must be carried out by competent personnel. These risks include inhalation of dust and potential explosion hazards.

In order to maintain the original collector specification and to ensure the same level of safety, only genuine spare parts should be fitted.

Every care has been taken to avoid the risk of ignition of a potentially flammable atmosphere. The measures taken to avoid ignition should not be altered since this may result in unsafe operation. Particular care should be taken during maintenance and component replacement to ensure the same level of safety is maintained. When replacing fan impellors, avoid any rubbing of components (to prevent mechanical sparks).

Care should be taken during cleaning and maintenance to avoid creating static discharges that have the potential to ignite a flammable atmosphere.

Routine inspection

To maintain the optimum performance of any DCE HV500 collector, a routine inspection should be made to minimise down-time in the event of equipment malfunction, particularly on continuous performance applications and to ensure the equipment is maintained to its original supply condition.

Any abnormal change in pressure differential across the filter elements indicates a change in operating conditions and a fault to be rectified. For example, a prolonged stoppage of compressed air will cause an excessive build-up of dust on the elements, resulting in a greatly increased pressure drop.

After the fault has been rectified, resumption of compressed air cleaning will usually return the filter to normal efficiency. However, it is advisable to operate the controller in still-air conditions for a short period to dislodge any accumulated dust before putting the HV500 collector into operation.

Filter resistance can be checked by connecting a U-tube manometer or differential-type pressure gauge to tapping points on the collector body (figure 1). This will give a continuous indication of the state of the filter. Once running, the operating resistance will be relatively stable, the actual value depending on the air volume and the characteristics of the dust being handled.

If build up of dust is suspected due to rotary valve malfunction or if an inspection of the inlet baffle is required, the inspection port/baffle unit may be removed (figure 7).

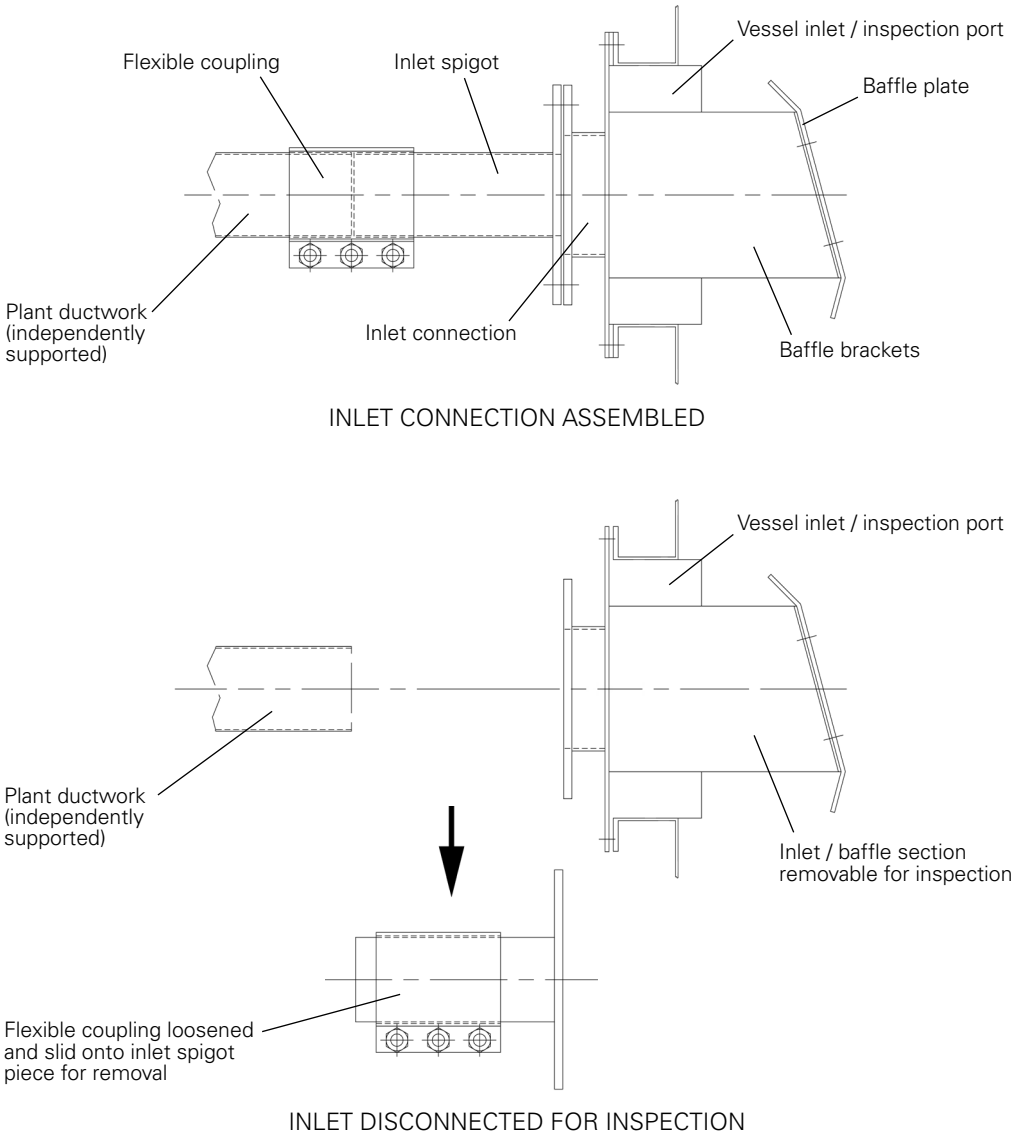

FIGURE 7: Inspection port / baffle unit removal

It is recommended to periodically inspect the general casing integrity and support structures.

It is recommended that door fastener threads are lubricated at regular intervals.

Do not operate above recommended compressed air pressure. Excessive pressure will reduce the working life of components.

DCE HV500 collectors fitted with explosion relief should be inspected weekly to ensure that the bursting panels are intact and clear of obstruction. During winter, particular care must be taken to prevent build-up of snow or ice on explosion panels.

Servicing schedule

A record of all pressure checks should be kept in a log book to aid the speedy diagnosis of faulty operation.

Weekly

1. Open the valve at the bottom of the moisture separator bowl and allow the collected water to drain off, then close the valve.
2. Connect a manometer to tapping points (refer to Routine inspection) and measure the pressure drop across the filter.

Monthly

Check operation of solenoid and diaphragm valves.

It may be necessary to check the operation of the valves while the system is pressurised. Care should be taken to avoid injury.

If it is found necessary to replace a diaphragm, use the following procedure (figure 8):

Use service kit available from Donaldson.

1. Switch off exhauster and compressed air supply.
2. Remove nylon tube (A) by pulling out from valve.
3. Remove the hexagon head set screws and shakeproof washers securing the valve bonnet (B). This will release the manifold pressure.
4. The diaphragm and spring (if fitted) can now be replaced, first ensuring the 'bleed' hole pin is not blocked.
5. Ensure that diaphragm fits over 'bleed' hole pin and that the nylon sealing washer is inside throat of valve.
6. Position spring (if fitted) inside bonnet recess.
7. Refit bonnet ensuring spring (if fitted) locates over diaphragm disc shoulder and bonnet locates over 'bleed' hole pin.
8. Refit and tighten the hexagonal head set screws and shakeproof washers.
9. Push-fit nylon tube back into valve.
10. The collector is ready to restart.

Annually

1. Moisture separator – Isolate the compressed air supply and release the manifold pressure via the moisture separator. Remove and clean the filter element.
2. Air manifold – Having isolated the compressed air supply and released the manifold pressure, remove the drain plug and air inlet connections and clean out any accumulated sludge and inspect to any current local legislation.

   It may be necessary to remove a diaphragm valve for internal inspection purposes.

3. Doors – Check the dust seals on all access doors for damage or ageing and ensure that they are properly seated to prevent entry of water. This is particularly important where the collector is located outside or in a wet atmosphere.

   Faulty seals must be replaced.

4. Filter elements/modules – Before removing the filter elements/modules, cover the base with some suitable material to avoid the dust falling into the valve exhaust port. Loosen and remove the jet tubes.

   Filter elements (fabric media) – Remove each filter element and check the general condition of the bag. Clean each bag using a vacuum cleaner. If the dust is of an abrasive nature it is advisable to examine the elements more frequently.

   Bags showing holes must be replaced.

   Any dust falling into the valve exhaust port should be removed before restarting the collector.

   When refitting filter elements, tighten bottom clamp first. Do not over-tighten. (Recommended maximum torque 20 ft-lbs f or 27 Nm).

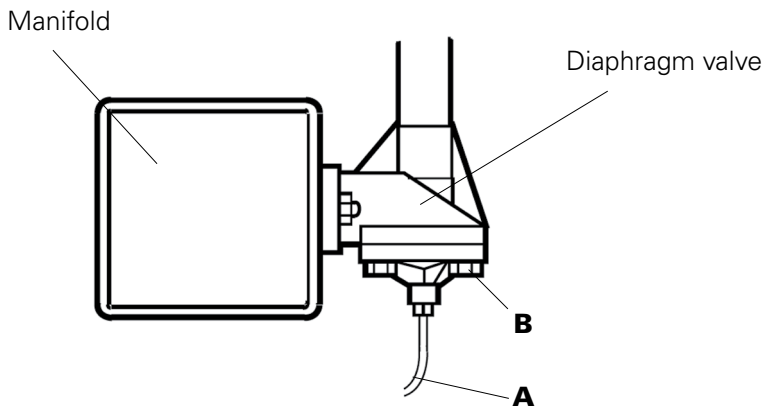

FIGURE 8: Valve diaphragm replacement

Filter modules (spun-bonded polyester media) – Remove each filter module and check the general condition of the media and integral header seal. Clean the outside of each filter module using a vacuum cleaner. If the dust is of an abrasive nature it is advisable to examine the modules more frequently.

Modules showing excessive wear must be replaced.

Any dust falling into the valve exhaust port should be removed before restarting the collector.

5. Jet Tubes – Check that the jet tubes are clean and that the jet orifices are clear.
6. Flameproof maintenance – It is important that all flameproof enclosures, motors and cable glands are inspected for corrosion and tightness.

   In particularly aggressive environments, this inspection should be more frequent.

7. Explosion risks – Check measures taken to avoid ignition sources are still in place.

TABLE 1 - FAULT LOCATION

Symptom	Possible cause	Action
Part loss of suction (excessive pressure differential).	Compressed air malfunction.	If compressor stopped, rectify compressor fault; check interlocks (if fitted); check fan motor and supply; check drive.
		If compressor OK, check pulses at manifold pressure gauge.
		Clean filters, dismantle and clean moisture separator.
		Check for excessive water or oil in compressed air supply, and possible accumulation in manifold.
	No pulses of air to valves.	Refer to 'Fault location' table in controller manual supplied with dust filter.
	Filter blocked.	Check that emptying device or equipment being served is working. Check starter overloads, fuses and interlocks.
		Run filter clear*, then remove each element in turn and vacuum-clean all its outer surfaces. Renew any filter elements that are damaged.
	Motor speed low.	Check line voltage, phases, motor connections. For Star/Delta applications, check motor is in Delta.
	Incorrect exhauster motor rotation.	Check electrical connections and transpose if necessary.
Total loss of suction.	Exhauster motor stopped.	Check motor supply overloads, fuses and interlocks (if fitted).
		Check motor connections and windings.
	Filter blocked	Check that emptying device or discharge equipment is working. Check starter overloads, fuses and interlocks.
		Run filter clear*, then remove each element in turn and vacuum-clean all its outer surfaces. Renew any filter elements that are damaged.
	Ducting blocked.	Check throughout and clear.
Visible effluent in clean air outlet.	Filter elements not properly sealed.	Tighten element retaining bolts to ensure compression of sealing rings.
	Damaged sealing gasket or filter element.	Identify and replace defective component(s) by following the procedure given under 'Annually' in Servicing schedule. There may be a build up of dust in the clean air chamber, this should be removed prior to restarting the collector. A check for excessive vibration should also be made on the blower/ exhauster before and after restarting to ensure no damage to the impellor has occurred.

*To run filter clear, switch off main blower/exhauster only and allow the controller to perform several complete cleaning cycles before switching off compressor etc.

This procedure is not recommended where an explosion relief assembly is fitted, as damage could result to the bursting panel. In such cases consult with Donaldson.

SPECIFICATION

Description and range

The DCE HV500 Series is a range of self-contained, high suction, automatic reverse-jet cleaned dust collectors, designed to handle known quantities of dust-laden air, and capable of continuous operation over extended periods. The reverse jet cleaning system, which functions during the normal course of operation, not only serves to maintain optimum filtering efficiency at all times, but enables the filter to operate at a constant rating – in that it maintains a uniform pressure drop across the collector.

The basis of the DCE HV500 is a vessel comprising a group of filter elements/modules mounted in a sealed frame. The elements are slotted side by side into the frame and the individual sealing arrangement effectively separates the dirty (inlet) side of the collector from the clean (outlet) side (figure 6). Removal of the filter elements/modules, when necessary, is always carried out from the clean side of the collector.

The DCE HV500 collector is available in a range of sizes with either fabric or spun-bonded polyester media (see Table 2), all available with either a dust container or hopper flanged for connection to a suitable valve. For further details refer to Publication 2561.

The DCE HV500 can be supplied, if required, suitably equipped for use in a potentially explosive atmosphere (Directive 2014/34/EU) satisfying the requirements for group II category 2G or 2D and 3G or 3D T135°C.

TABLE 2 - DCE HV500 SERIES DUST COLLECTOR RANGE

FABRIC MEDIA				SPUN-BONDED POLYESTER MEDIA			
Collector type	Filtration area	Nr. of elements	Bag length	Collector type	Filtration area	Nr. of elements	Bag length
DCE HV F504	4 m²	6	0.7 m	DCE HV C508	8 m²	2	0.8 m
DCE HV F506	6 m²	6	1.0 m	DCE HV C510	10 m²	2	1.0 m
DCE HV F508	8 m²	12	0.7 m	DCE HV C516	16 m²	4	0.8 m
DCE HV F510	10 m²	10	1.0 m	DCE HV C520	20 m²	4	1.0 m
DCE HV F514	14 m²	20	0.7 m	DCE HV C524	24 m²	6	0.8 m
DCE HV F520	20 m²	20	1.0 m	DCE HV C530	30 m²	6	1.0 m
DCE HV F530	30 m²	30	1.0 m	DCE HV C540	40 m²	8	1.0 m
DCE HV F538	38 m²	30	1.25 m	DCE HV C548	48 m²	12	0.8 m
DCE HV F545	45 m²	30	1.5 m				

***Designation codes:**

A number or letter is added after the figures to signify the type as follows:

-5, -10 or -15 = standard collector (number represents dust container size)

-D = represents collector fitted with discharge connection flange

Construction

The collector casing is a fully welded steel construction which permits a -500 mbar maximum operating pressure.

The control equipment consists of the air distribution manifold, diaphragm valves, solenoid valves and controller. These items are mounted immediately below the clean air section of the collector.

Large hinged inspection doors give access to the clean air chamber for removal of the jet tubes and filter elements when servicing.

Seal frame (figure 1, figure 6, figure 9 and figure 10)

The rigid sheet steel seal frame plate is suitably reinforced and positioned by bolting to an angle frame within the collector casing. Incorporated in the plate are slots to accept the filter element/modules.

The filter elements (figure 9) are inserted from the clean side of the collector and secured by clamps fitted to mounting studs incorporated into the seal frame plate.

The filter modules (figure 10) are inserted from the clean side of the collector and each one is individually clamped by means of a steel angle frame and secured by two clamps (quick release handles), eliminating the need for any tools for this operation.

An earthing boss is fitted to all antistatic versions of collectors for antistatic earthing (figure 1).

Compressed air distribution manifold (figure 1)

The manifold is fabricated from either 150sq x 6mm thick or 180sq x 8mm thick steel tube, with welded ends. Holes are provided for diaphragm valves, drain plug, pressure relief valve and air inlet moisture separator connections. (Moisture separator and pressure relief valve are not supplied as standard with the dust collector).

It may be necessary to remove a diaphragm valve for internal inspection purposes.

The manifold supplied with the DCE HV500 dust collector has been independently approved to operate under the conditions as specified in Table 5.

Valves (figure 1 and figure 11)

The compressed air is supplied to each jet tube via a diaphragm valve, the opening and closing of which is controlled by a solenoid-operated pilot valve connected to the diaphragm vent by a flexible nylon tube. The solenoid valves are energised sequentially by electrical pulses generated by the controller.

Jet tubes (figure 1, figure 6, figure 9 and figure 10)

Positioned in the ‘clean side’ of the collector is a series of full-length ‘jet tubes’ having small-diameter jet orifices located adjacent to the outlet header of each filter element/module. The ‘open’ end of each tube is connected by a rubber hose to a compressed air valve; the closed end is flattened and crimped, and is secured by a bolt and nut.

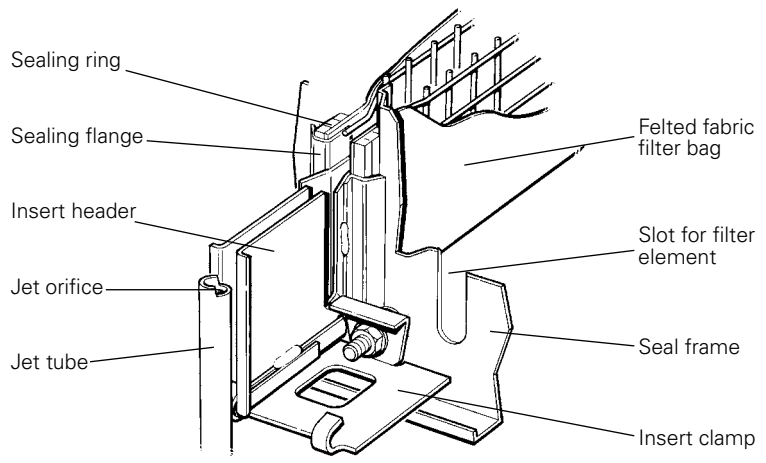

FIGURE 9: Fabric filter element details

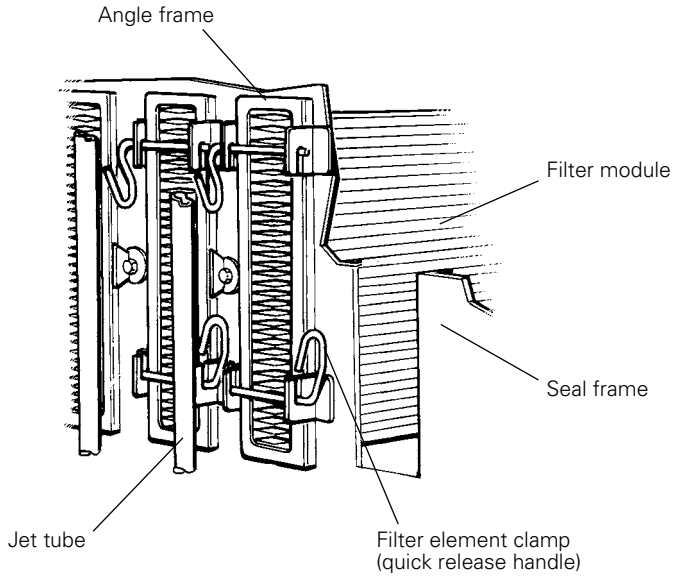

FIGURE 10: Spun-bonded polyester filter module details

Fabric filter elements (figure 7 and figure 9)

Each removable filter element is rectangular in shape and comprises a slim wire mesh frame or 'insert' for the filter bag, to which is welded a shaped steel outlet header with sealing flange. The filter bag itself consists of a rectangular pocket incorporating a resilient sealing ring at the open end. The bag is pulled over the wire portion of the insert until the sealing ring meets the sealing flange. The ring is compressed when the element is clamped into the seal frame, effectively isolating the dirty side from the clean side of the collector.

There are four sizes of element, designated 0.7 m, 1.0 m, 1.25 m and 1.5 m according to the length of filter bag and used as shown in Table 2.

Antistatic filter elements are available, together with stainless steel and brass securing bolts and washers, as an option for installations where the dust is potentially explosive. (See 'Installation' section).

Spun-bonded polyester filter modules (figure 10)

Each removable filter module is manufactured from a spun-bonded polyester filter media with polyurethane end mouldings. The header moulding contains an integral seal.

There are two sizes of module, designated 4 m² and 5 m², and used as shown in Table 2.

Antistatic filter modules are available, which are located into a plated steel frame, as an option for installations where the dust is potentially explosive. (See 'Installation' section).

Controller

For C-Controller specifications, refer to the C-Controller manual.

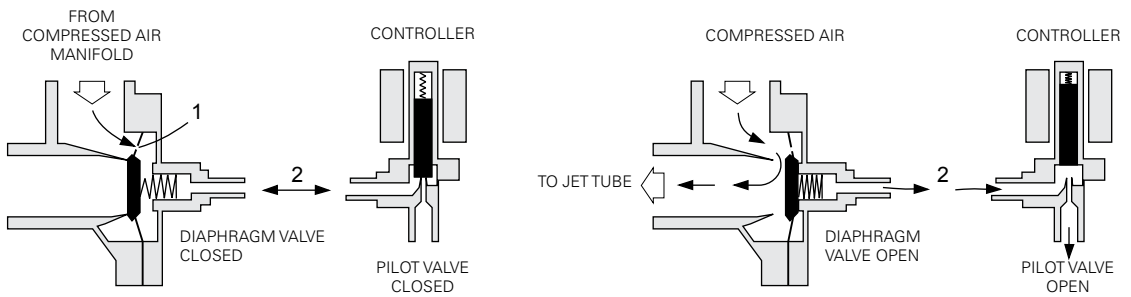

a Compressed air from the manifold penetrates diaphragm through fine hole '1' into connecting tube '2'.

b When solenoid is activated the pilot valve opens, releasing the compressed air from connecting tube '2' and allowing diaphragm to open.

FIGURE 11: The valve system

TABLE 3 - COMPRESSED AIR REQUIREMENTS

Collector type	Working compressed air pressure [a]		Atmospheric air volume – F.A.D. [B] at 12 sec. Intervals [c]		Pulse duration	Minimum pipe diameter [d]
DCE HV F504 and F506	4.1 bar	60 psig	3.3 m^3/h	1.9 cfm	100 ms	1/2″ NB (12)
DCE HV F510	4.1 bar	60 psig	4.0 m^3/h	2.4 cfm	100 ms	1/2″ NB (12)
DCE HV F508	5.2 bar	55 psig	6.0 m^3/h	3.6 cfm	100 ms	1/2″ NB (12)
DCE HV F514 and F520	4.5 bar	75 psig	7.2 m^3/h	4.2 cfm	100 ms	1/2″ NB (12)
DCE HV F530	4.5 bar	75 psig	7.8 m^3/h	4.6 cfm	100 ms	1/2″ NB (12)
DCE HV F538 and F545	3.7 bar	65 psig	9.5 m^3/h	4.6 cfm	100 ms	1/2″ NB (12)
DCE HV C508, C510 C516 and C520	3.7 bar	65 psig	7.3 m^3/h	4.3 cfm	100 ms	1/2″ NB (12)
DCE HV C524 and C530	4.5 bar	55 psig	9.6 m^3/h	5.7 cfm	100 ms	1/2″ NB (12)
DCE HV C540	4.5 bar	65 psig	9.8 m^3/h	5.8 cfm	100 ms	1/2″ NB (12)
DCE HV C548	4.5 bar	65 psig	13.7 m^3/h	8.1 cfm	100 ms	1/2″ NB (12)

[a] Normal operating pressure. [b] Recommended atmospheric air volume of clean, dry compressed air.
[c] Recommended initial setting; this may be varied with experience.

[d] Sizes suitable for runs of pipe up to 30 m (100ft) in length. For longer runs consult with Donaldson.

1 bar = 10^5 Pa

TABLE 4 - DESIGN LIMITS

Temperature range:	-10° to +60°C
Pressure limit:	-500 mbar maximum operating pressure

TABLE 5 - COMPRESSED AIR MANIFOLD DESIGN DETAILS

Design pressure:	6.9 bar (100 psig)
Maximum operating pressure, PS:	6.2 bar (90 psig)
Test pressure:	10.35 bar (150 psig)
Design temperature:	-30° to +60°C
Maximum rating of pressure relief device:	17 dm^3/s at 6.9 bar (not supplied as standard)
Manifold volume:	9.6 litres (DCE HV F504 and F506 collectors) 13.6 litres (DCE HV F508 collector) 17.0 litres (DCE HV F510 collector) 24.3 litres (DCE HV F514, F520, F530, F538 and F545 collectors) 11.2 litres (DCE HV C508, C510, C516, C520 and C540 collectors) 17.8 litres (DCE HV C524, C530 and C548 collectors)
Product of pressure and capacity:	66.3 bar litres (DCE HV F504 and F506 collectors) 94.0 bar litres (DCE HV F508 collector) 117.3 bar litres (DCE HV F510 collector) 167.7 bar litres (DCE HV F514, F520, F530, F538 and F545 collectors) 77.3 bar litres (DCE HV C508, C510, C516, C520 and C540 collectors) 122.8 bar litres (DCE HV C524, C530 and C548 collectors)
Material used for manifold construction:	Structural hollow section
Minimum metal thickness before manifold requires special inspection:	To improve corrosion resistance the manifold is painted externally and internally using cathodic electrocoat. 5.5 mm (DCE HV F504, F506, F510, C508, C510, C516, C520, C524, C530, C540 and C548 collectors) 7.0 mm (DCE HV F508, F514, F520, F530, F538 and F545 collectors)

1 bar = 10^5 Pa

SPARE PARTS

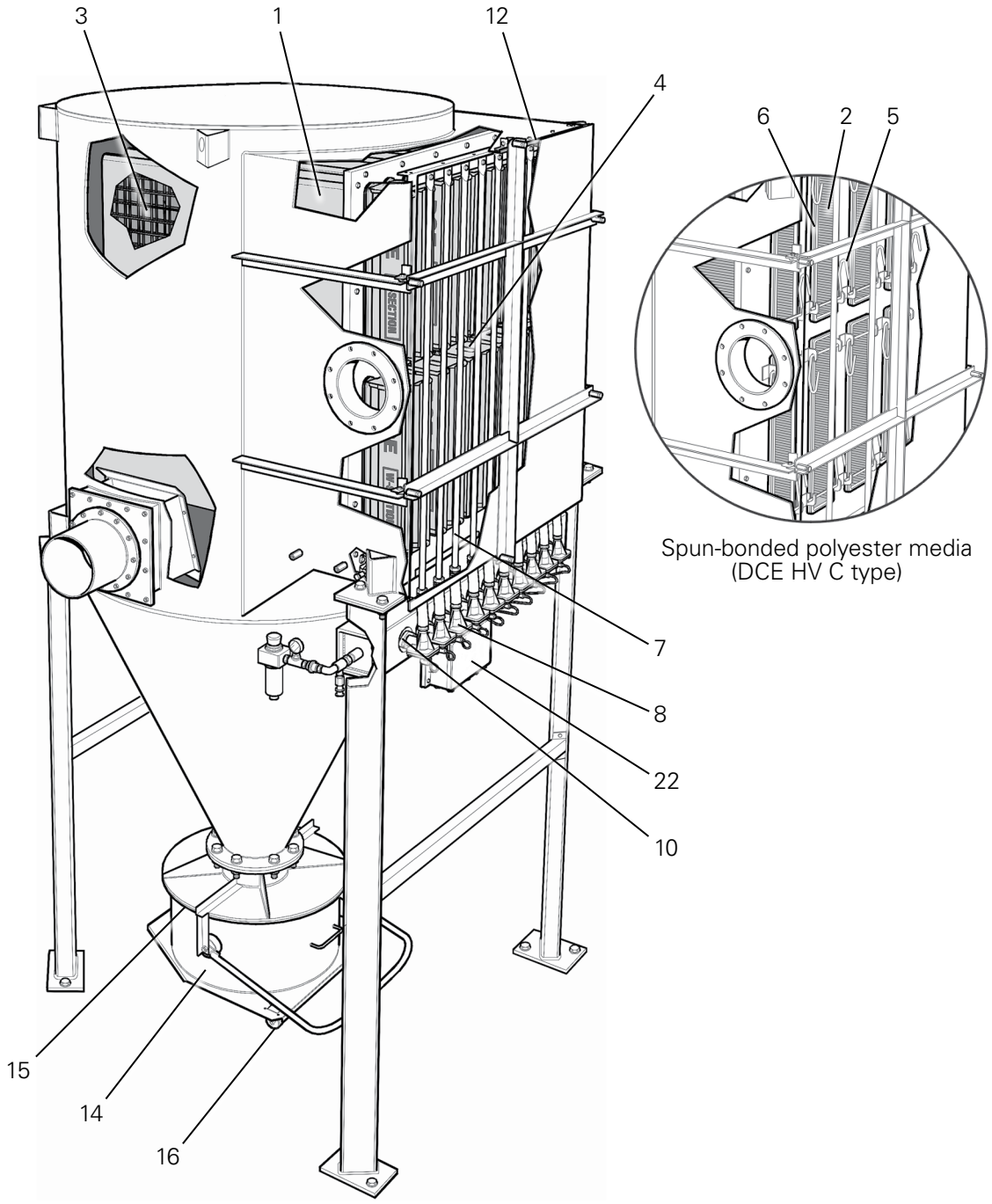

DCE HV F520-10 illustrated

FIGURE 12: Spare parts identification

Item	Description			Part Number	✔
	Filter element assembly				
1	Fabric filter bag, Dura-life	0.7 m^2	HV F504, F508 and F514	1A 3139 2316	✔
		1.0 m^2	HV F506, F510, F520 and F530	1A 3139 2317	✔
		1.25 m^2	HV F538	1A 3139 2318	✔
		1.5 m^2	HV F545	1A 3139 2319	✔
1	Fabric filter bag, Dura-life oleophobic	0.7 m^2	HV F504, F508 and F514	1A 3139 2328	✔
		1.0 m^2	HV F506, F510, F520 and F530	1A 3139 2329	✔
		1.25 m^2	HV F538	1A 3139 2330	✔
		1.5 m^2	HV F545	1A 3139 2331	✔
1	Fabric filter bag, Dura-life epitropic	0.7 m^2	HV F504, F508 and F514	1A 3139 2322	✔
		1.0 m^2	HV F506, F510, F520 and F530	1A 3139 2323	✔
		1.25 m^2	HV F538	1A 3139 2324	✔
		1.5 m^2	HV F545	1A 3139 2325	✔
1	Fabric filter bag, Dura-life oleophobic and epitropic	0.7 m^2	HV F504, F508 and F514	1A 3139 2334	✔
		1.0 m^2	HV F506, F510, F520 and F530	1A 3139 2335	✔
		1.25 m^2	HV F538	1A 3139 2336	✔
		1.5 m^2	HV F545	1A 3139 2337	✔
1	Fabric filter bag, polypropylene	0.7 m^2	HV F504, F508 and F514	1A 3139 2026	✔
		1.0 m^2	HV F506, F510, F520 and F530	1A 3139 2010	✔
		1.25 m^2	HV F538	1A 3139 2057	✔
		1.5 m^2	HV F545	1A 3139 2042	✔
1	Fabric filter bag, polypropylene antistatic¶	0.7 m^2	HV F504, F508 and F514	1A 3139 2034	✔
		1.0 m^2	HV F506, F510, F520 and F530	1A 3139 2018	✔
		1.25 m^2	HV F538	1A 3139 2065	✔
		1.5 m^2	HV F545	1A 3139 2050	✔
1	Fabric filter bag, Tetratex	0.7 m^2	HV F504, F508 and F514	1A 3139 2278	✔
		1.0 m^2	HV F506, F510, F520 and F530	1A 3139 2279	✔
		1.25 m^2	HV F538	1A 3139 2280	✔
		1.5 m^2	HV F545	1A 3139 2281	✔
1	Fabric filter bag, Tetratex antistatic¶	0.7 m^2	HV F504, F508 and F514	1A 3139 2290	✔
		1.0 m^2	HV F506, F510, F520 and F530	1A 3139 2291	✔
		1.25 m^2	HV F538	1A 3139 2292	✔
		1.5 m^2	HV F545	1A 3139 2293	✔
1	Fabric filter bag, Dralon (homopolymer acrylic)	0.7 m^2	HV F504, F508 and F514	1A 3139 2022	✔
		1.0 m^2	HV F506, F510, F520 and F530	1A 3139 2000	✔
		1.25 m^2	HV F538	1A 3139 2053	✔
		1.5 m^2	HV F545	1A 3139 2038	✔
1	Fabric filter bag, Nomex	0.7 m^2	HV F504, F508 and F514	1A 3139 2030	✔
		1.0 m^2	HV F506, F510, F520 and F530	1A 3139 2014	✔
		1.25 m^2	HV F538	1A 3139 2061	✔
		1.5 m^2	HV F545	1A 3139 2046	✔
2	Spun-bonded filter module		HV C type (II models)	1A 6339 9000	✔
2	Spun-bonded filter module, antistatic¶		HV C type (II models)	1A 6339 9001	✔
	¶ Fitting antistatic filter elements/modules will not provide a full earthing arrangement without fitting and additional earthing bar and straps				
3	Insert (for fabric filter bag)	0.7 m^2	HV F504, F508 and F514	1A 3231 9000	
		1.0 m^2	HV F506, F510, F520 and F530	1A 3231 9001	
		1.25 m^2	HV F538	1A 3331 9000	
		1.5 m^2	HV F545	1A 3131 9000	

✔ Recommended spares for up to two years' operation

Damaged safety related parts and safety components should be replaced only with genuine original spare parts otherwise CE mark will become invalid

Item	Description		Part Number	✔
4	Insert clamp (for fabric filter bag)		1A 3131 0007	
5	Module clamp (for spun-bonded filter module)		1A 6311 2017	
		Antistatic SS304	1A 6313 2017	
		Antistatic SS316	1A 6315 2017	
6	Module header frame assembly (for spun-bonded filter module)		1A 6331 0008	
		Antistatic SS304	1A 6333 0007	
		Antistatic SS316	1A 6335 0007	
7	Jet tube	HV F504, F506 and F510	1A 3381 1007	
		HV F508, F514 and F520	1A 3381 1006	
		HV F530, F538 and F545	1A 3381 1008	
		HV C508, C510, C516, C520, C524 and C530		
		HV C540 and C548	1A 3781 1002	
			1A 3781 1003	
	Compressed air assembly			
8	Diaphragm valve	HV F504, F506, F508, F510, F514 and F520	1A 3189 9003	
		HV F530, F538, F545 and all HV C type	1A 3189 9011	
9	Diaphragm valve service kit- item not illustrated	HV F504, F506, F508, F510, F514 and F520	1A 2565 3205	✔
		HV F530, F538, F545 and all HV C type	1A 2565 3204	✔
10	Gasket, diaphragm valve		1A 3189 0066	✔
11	Differential pressure gauge assembly- item not illustrated		1A 2151 9155	
	Doors			
12	Access door seal	25 mm x 12.5 mm x 2.5 m HV F504 and F506	1A 1816 6684	✔
		25 mm x 12.5 mm x 3.6 m HV F508	1A 1816 6684	✔
		25 mm x 12.5 mm x 3.3 m HV F510	1A 1816 6684	✔
		25 mm x 12.5 mm x 4.4 m HV F514, F520	1A 1816 6684	✔
		25 mm x 12.5 mm x 5.6 m HV F530, F538, G545	1A 1816 6684	✔
		25 mm x 12.5 mm x 3.0 m HV C508, C510, C516, C520	1A 1816 6684	✔
		25 mm x 12.5 mm x 3.7 m HVC524, C530	1A 1816 6684	✔
		25 mm x 12.5 mm x 4.1 m HV C540	1A 1816 6684	✔
		25 mm x 12.5 mm x 4.8 m HV C548	1A 1816 6684	✔
13	Inspection door seal- item not illustrated	HV F504, F506, F508, F514, C508, C510, C516	1A 3719 0009	✔
		HV F520, F530, F538, C520, C524, C530, C540	1A 379 0008	✔
		HV F545 and C548	1A 3719 0007	✔
	Dust container assembly			
14	Dust container (without castors)	55 litre	1A 3741 1002	
		100 litre	1A 3741 1001	
		155 litre	1A 3741 1000	
15	Dust container seal		1A 1816 5040	✔
16	Castor	Fixed	7253672	✔
		Swivel	7253673	✔
17	Pressure balance kit- item not illustrated		1A 3741 7000	✔

✔ Recommended spares for up to two years' operation

Damaged safety related parts and safety components should be replaced only with genuine original spare parts otherwise CE mark will become invalid

Item	Description	Part Number	✔
18	Sock filter (for pressure balance pipe) - item not illustrated	1A 2139 7210	
19	Sock filter (for pressure Polythene bag liner (for dust container with pressure balance) - item not illustrated	1A 5995 5145	
	Explosion relief assembly		
20	Explosion relief panel (top and rear) - item not illustrated		
	HV F504 and F508	AM1299401	✔
	HV F506, F510, F514, F520 and F530	AM1299601	✔
	HV F538 and F545	AM1299701	✔
21	Neoprene seal (for top and rear explosion relief panel) - item not illustrated		
	HV F504 and F508	1A 3769 3000	✔
	HV F506, F510, F514, F520 and F530	1A 3769 3002	✔
	HV F538 and F545	1A 3769 3004	✔
21	Silicone seal (for top and rear explosion relief panel)- item not illustrated		
	HV F504 and F508	1A 3769 3001	✔
	HV F506, F510, F514, F520 and F530	1A 3769 3003	✔
	HV F538 and F545	1A 3769 3005	✔
	Controller		
12	For controller spares information refer to the Controller manual.		

✔ Recommended spares for up to two years' operation

Damaged safety related parts and safety components should be replaced only with genuine original spare parts otherwise CE mark will become invalid

DECLARATION OF CONFORMITY