Operation Manual GB

Ultrapac® HED / ALD / MSD 0050 - 1000
Ultrapure ALG 80 S - 375 S
Oilfreepac® OFP 0050 - 1000

Standard

+

Superplus Ultraconomy

(Dewpoint Control)

F119436-05-2026-EN-IOM-ULTRAPURE-ALG-S-35S-115V-RE18

Donaldson.

Introduction

As the user / operator, you should make yourself familiar with this operation manual in terms of the safety, construction, function, maintenance and servicing of the adsorption dryer HED/ALD/MSD, Breathing air unit ALG and processing unit OFP.

A basic prerequisite for safe working with and error-free operation of the unit is a knowledge of the basic special safety features.

This operation manual includes the required safety information in order to operate this unit safety.

This operation manual and especially the safety information, are to be followed by all persons working with the unit. It is imperative that this operation manual is made freely available at all times to machine operators and are to be kept at the place where the unit is installed.

Explanation of the used Symbols

Hint
Provides hints on operation and usage of the equipment.

Important
Provides hints on preventing equipment damage.

Caution
Denotes direct and immediate risk of death or personal injury if the provided information is not followed. Failure to comply can lead to serious health problems including life-threatening injuries.

Dangers due to electrical energy
Denotes a risk of electric shock if the provided information is not followed. Failure to comply may result in electric shock and could lead to death or personal injury.

Danger by pressurized parts of the unit
Reminds the operator to depressurize the unit before performing service work. Failure to comply may result in personal injury or equipment damage.

Noise during pressure release
Wear ear protectors for your own safety!

Fine dust
Wear a dusk mask for your own safety!

Environment protection
Reminds the operator to wear ear protectors due to high noise levels. Failure to comply can lead to hearing damage.

Shutdown / Depressurizing of the unit
(see chapter 7.2 / 7.3).

Start-up (see chapter 7)

Use suitable gloves

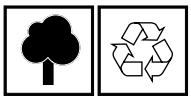

Waste must be disposed of in accordance with local regulations

Afterfilter (particle filter)

Prefilter (coalescence filter)

Content

1 The Manufacturer 7
2 Recommendations to the Work Protection 8
2.1 General Safety Information 8
2.2 Safety information for Transport and Installation 10
2.3 Safety Measures during Operation 10
2.4 Dangers due to Electrical Energy 11
2.5 Dangers due to Desiccant 11
2.6 Safety Measures during Maintenance, Servicing and Repair Work 12
2.7 Environmental Protection 13
2.8 Requirements for the Operator 13
2.9 Requirements for Operating Staff 14
2.10 Warranty and Liability 14
3 Fundamental Function 15
4 Technical Data 16
4.1 Technical Data HED / ALD / MSD 16
4.2 Technical Data ALG 18
4.3 Technical Data OFP 20
5 Before Installation 22
5.1 Transport and Installation 22
5.1.1 Safety hints concerning transport 22
6 Installation 23
6.1 General Hints 23
6.2 Installation Hints 23
6.3 Connection to the Compressed Air Network 24
6.4 Electrical Connection 25
6.5 Intermittent Operation 25
7 Start-up 26
7.1 Initial Start-up 26
7.2 Shutdown 27
7.3 Depressurising the Unit 28
8 Unit Description 29
8.1 Parts of the Unit 29
8.1.1 Parts of the unit HED /ALD / MSD 0050-1000 29
8.1.2 Parts of the Unit ALG 80 S-375 S 30
8.1.3 Parts of the Unit OFP 0050-1000 31
8.1.4 Connections Board 32
8.1.5 Frontpanel Standard 34
8.1.6 Frontpanel Dewpoint Control 35
9 Function of the Unit 36
9.1 Function HED/ALD/MSD 36
9.2 Function ALG 38
9.3 Function OFP 40
9.4 Function of the Electronic Controller 43
9.4.1 Time Control 44
9.4.2 Dewpoint Control 44
9.4.3 Alarm Conditions 45
9.4.4 Alarm Inputs 45
9.4.5 Software-generated Alarm (only Dewpoint Control) 45
9.4.6 Intermittent Operation 45
9.4.7 In Case of a Blackout 45

10 Operation 46
10.1 Functional elements of the Front Panel (Standard/ Dewpoint Control) 46
10.2 The Display (Standard-Version) 46
10.2.1 Service Messages (Standard Version) 47
10.2.2 Reset of the Service Messages (Standard-Version) 48
10.3 The Text Display (Dewpoint Control) 50
10.3.1 Function of the Buttons 50
10.3.2 Display Contents 51
10.3.3 Service Intervals 54
10.3.4 Graphic Representation of the Service 54
11 Malfunctions 55
11.1 Possible Causes of Faults 55
11.2 Troubleshooting 56
11.2.1 Troubleshooting HED/ALD/MSD 56
11.2.2 Troubleshooting ALG 58
11.2.3 Troubleshooting OFP 60
12 Maintenance and Servicing 63
12.1 Maintenance Intervalls 63
12.2 Service-Sets 65
12.2.1 Service-Sets HED / ALD / MSD 65
12.2.2 Service-Sets ALG 66
12.2.3 Service-Sets OFP 67
12.3 Maintenance Filter 68
12.4 Maintenance Condensate Drain 71
12.5 Maintenance – 2/2-Way Solenoid Valve 72
12.6 Maintenance – Shuttle Valves 75
12.7 Exchange of Desiccant / Adsorbents 77
13 Options and Accessories 79
14 Appendix 81
14.1 Technical Data 81
14.2 P & I – Diagram 81
14.3 Dimension Sheet 81
14.4 General arrangement 81
14.5 Instrument and Spare Parts List 81
14.6 Electrical Documentation 81
14.7 Manufacturer and Accessory Documentation 81

1 The Manufacturer

The manufacturer of the unit is:

Donaldson Filtration Deutschland GmbH
Industrial Filtration Solutions
Büssingstr. 1
D-42781 Haan

www.donaldson.com

If required, additional copies of the Operation Manual may be requested using the above contact information.

If writing or telephoning, please give us the following data:

Dryer Type : _____

Serial Number *) : _____

Year of Construction *) : _____

*)The serial number and year of construction can be found at the type plate of your unit.

The manufacturer reserves the right to make changes and improvements without prior notice!

2 Recommendations to the Work Protection

The manufacturer explicitly excludes all responsibility or liability for damage and / or injury caused by failure to follow these special points requiring attention, or others, or by failing to pay the necessary attention when operating and handling these adsorption dryers, even if this is not explicitly stated in individual cases.

In order to ensure proper operation of the unit, please pay attention to all safety information and general information given in this operation manual.

All safety information is always intended to ensure your personal safety!

All relevant regulations for industrial safety, general safety rules and information included in the operation manual, apply to the operation of the adsorption dryer.
The adsorption dryer was designed and constructed acc. to the generally recognised regulations concerning technical matters and safety work.

Design / Development, production, installation and after-sales service for the unit are subject to a certified quality assurance system as per DIN EN ISO 9001.

2.1 General Safety Information

Operate the unit properly!

The unit may only be used for its intended purpose. The adsorption dryer is built exclusively for the drying of compressed air or nitrogen (except ALG). Any other use of the unit, or one deviating from this one stated, shall be considered inappropriate.

The manufacturer shall not be liable, where this is permitted under law, for any damage incurred as a result of misuse.

The medium to be dried must not contain any corroding components which could cause corrosion in the material of the pressure unit in an unacceptable way. Corrosion during intended usage of C-steel components is taken into account by providing an additional wall thickness of 1 mm or an adequate seal respectively.

The manufacturer guarantees for the use of suitable materials. If the requester specifies materials for the components of the unit, the guarantee of the suitability of the materials will rest upon the requester.

Pressure and temperature of the medium must correspond to the specification on the type plate and the operation manual!

The pressure unit is not designed for loadings by traffic, wind and earthquakes. In the case of the appearance of these loadings, the pressure unit must be protected by suitable measures against these loadings.

Keep the Operation Manual at the installation site!

Ensure that the operation manual is always at hand with the unit making sure that it is available for the operating staff.

Use the appropriate tools!

When servicing the unit, use tools that are appropriate and are in good condition.
If special tools are required, approval must be given by the manufacturer beforehand.

Do not make any constructional changes to the unit!

Constructional changes to the unit may only be carried out by the manufacturer or after consultation of the manufacturer.

All work on the pressure vessels and pipelines, such as welding, constructional changes, installation work, etc. without consultation of the manufacturer and, if necessary, after consultation of the notified body, is forbidden and results in invalidity of the declaration of conformity. Failing to observe this prohibition can place you and your fellow-workers in danger.

Do not put any protective devices to the unit out of operation!

Protective devices against exceeding the maximum allowable operating conditions such as pressure and temperature are not part of the standard scope of supply. Never disable the optional protective devices of the unit. Never attempt to by-pass the protective devices.

Non-functional protective devices imply the greatest possible danger for you and your fellow-workers and can cause malfunctions in the unit.

Protection against exceeding the pressure / exceeding the temperature

It must be ensured that the pressure of the components of the unit should under no circumstances be able to exceed the maximum operating pressures.

As a standard it is the responsibility of the operator to secure protection against exceeding the pressure. It must be ensured that the pressure generating compressor and, should the occasion arise, the compressed air network downstream of the adsorption dryer are protected accordingly.

The operating process ensures that the temperature at operating pressure cannot exceed the maximum allowable operating temperatures of the unit components. The operator must ensure that the temperature of the medium does not exceed the maximum operating data of the unit.
If the pressure unit is under operating pressure, it must be guaranteed by suitable measures, that the allowable operating temperatures are not exceeded by the environment conditions at the place of installation.

Pressure vessels – periodic approvals / alternation of stress

Because of the cycle times of the pressure unit, the alternation of loads per year is dependent on the type. The design takes a lifetime of 10 years into consideration.

Examination of all pressurised vessel walls (inner examination). Shorter test and examination intervals are valid when national regulations require shorter intervals.

Fire risk

Safety devices against exceeding the pressure due to external fire are not part of the standard scope of the unit.

If there are potential fire risks at the place of installation of the unit the operator must ensure relevant protective measures against exceeding the maximum allowable operating parameters

2.2 Safety information for Transport and Installation

Dangers during transport

The unit should be lifted at the appropriate points with the proper equipment.
The unit must not be transported by the pipelines, because it could cause pipelines to leak and lead to serious malfunctioning of the unit.

Avoid stress by external strength and torgues

Ensure that no additional forces or stress is transmitted to the adsorption dryer via the connected pipelines, which could exceed the maximum capacity of the system.
If necessary, the operator has to guarantee this with suitable measures

Ensure that any vibration from other units or machinery is not transmitted to the adsorption dryer.
If necessary, limit these influences with the appropriate measures.
.

2.3 Safety Measures during Operation

Safe working conditions and proper operation of the unit can be achieved with knowledge of and adherence to the national working, operating and safety regulations. Furthermore, any internal plant regulations must be followed.

Check the unit for external damage at regular intervals.

Malfunctions or faults, which can compromise personal safety, must be resolved immediately. Follow the troubleshooting section (chapter 11) in the event of malfunction. Contact the manufacturer if the problem cannot be corrected.

Only allow properly trained personnel to operate the controller or the unit.

Never release the pressure manually during operation!

Never open the ball valves at the lower pipeline of the unit manually during operation. Failure to comply will result in severe personal injury.

Noise during pressure release!

Wear ear protectors for safety precausions! Failure to comply could result in hearing damage.

2.4 Dangers due to Electrical Energy

Electrical components must be serviced by a trained electrician acc. to the DIN VDE stipulations (or comparable national stipulations) and the regulations of the relevant power supply company on site.

If it is necessary to service electrical components, a second person must switch off the main breaker and the working area must be made safe by isolating the area and posting warning signs. Only insulated tools should be used to service the electrical components.

The electrical parts of the unit must be checked regularly. Only use original fuses for the rated current and voltage!

2.5 Dangers due to Desiccant

The adsorbents are located in the adsorbers (see chapter 8.1).

The type of adsorbent used depends on the type of processing unit. Only adsorbents from the manufacturer may be used.

Adsorbents are chemicals and thus, are subject to standard safety precautions (EN safety data sheet). The type of adsorbent used is not subject to any marking requirements as per the Hazardous Substances Ordinance.

Store the desiccant in a place accessible to authorized personnel only.

Warning!

Risk of injury through eye contact!

- If the adsorbent gets into contact with the eyes, flush the eyes with clean water. Seek medical attention immediately.

Warning!

Risk of injury if swallowed!

- If the adsorbent is swallowed, seek medical attention immediately!

There are no restrictions on the type of extinguishing agent to be used in the event of a fire. Nonetheless, the adsorbent strongly reacts with water or foam.

If pouring the desiccant, minimize the amount of dust in the surrounding area.

A dust mask must be worn if a MAK value of 6 mg/m³ (fine dust) is exceeded.

2.6 Safety Measures during Maintenance, Servicing and Repair Work

All personnel within the user's company involved with installation, start-up, operation, servicing, repair work of the unit must read and understand the Operation Manual beforehand, with special reference to the safety information. Contact the manufacturer with any questions.

The manufacturer is not liable for damage caused by inappropriate installation and start-up of the unit. The user bears all the risk in such a case.

The responsibility for maintenance and servicing work must be clearly established. Operating personnel must be informed before the start of maintenance and service.

Preventive maintenance should be performed at the recommended intervals by the manufacturer's after-sales service.

All the maintenance and service must be carried out on the unit per the operation manual instructions.

Warning!

Remove power during servicing

The unit must be powered down and must not have voltage or pressure during some types of maintenance or servicing work. Failure to comply will compromise personal safety.

- Shut down the unit properly.
- Depressurize the unit.
- Switch off the main breaker and lock it.
- Post a warning sign to prevent the unit from being switched on again.

Warning!

Safety Insulation Removal

If removing the existing contact safety insulation, care should be taken to sufficiently cool down the unit. Replace the insulation before restarting the unit.

Replace the consumable parts according to the intervals stated in the "Instrument and spare parts list" res. the chapter 12.2 "Service Sets".

Only use original spare parts and accessory parts from the manufacturer. There is no guarantee that non-original parts have been designed and manufactured to meet the safety and operational requirements of the unit.

Warning!

Parts Replacement.

Replace damaged parts with new ones. Pressure units must be taken out of operation if its parts are badly damaged.

For safety reasons, the manufacturer recommends the after sales service to remove spare or damaged parts from a unit.

After maintenance has been performed, a leakage test must be carried out.

When replacing larger sections, carefully fasten the section to the lifting gear making sure it is secure. Only use suitable lifting gear and load-bearing members that are in perfect condition and have adequate load-bearing capacity!

If carrying out installation work above head height, use suitable and safe working platforms or other means to stand higher. Use safety lines to protect against falling when carrying out maintenance work at heights above 1.80 meters.

2.7 Environmental Protection

Dispose of used items and materials properly.

Sort materials for disposal into categories to ease recycling.

It is absolutely essential that the desiccant is disposed of in the correct manner. Disposal will be arranged by the manufacturer’s after-sales service.

2.8 Requirements for the Operator

The operator should ensure that the unit operated by trained personnel familiar with safety stipulations and the handling of the unit. In detail, these are as follows:

Safety

- Accident prevention regulations
- Safety information (both general and specific to the unit)
- Safety devices of the unit
- Emergency procedures

Operation of the unit

- Unit start-up
- Troubleshooting
- Unit shutdown

2.9 Requirements for Operating Staff

All persons who are entrusted with the operation of the unit are required to

- follow the basic regulations for safety at work and accident prevention
- have read and understood the operation manual
- follow the instructions provided in this manual.

2.10 Warranty and Liability

Claims for warranty and liability concerning personal injury or material damage become void if caused by one or more of the following reasons:

- Inappropriate use or application of the unit.
- Incorrect installation, start-up, operation and maintenance of the unit.
- Operation of a noticeably defective unit
- Failure to follow operation manual procedures regarding concerning transport, storage, installation start-up and maintenance of the unit.
- Implementing constructional modifications to the unit.
- Inadequate monitoring of parts on the unit that are subject to wear
- Improper repairs
- Use of non-original parts

Please also note the general warranty conditions for products of the manufacturer.

3 Fundamental Function

The product family classic offers processing units in three different versions:

1. **HED / ALD / MSD**

   The HED / ALD / MSD is a cold regenerating adsorption dryer for the drying and processing of compressed air or nitrogen. The adsorption dryer includes one prefilters and one afterfilter.

2. **ALG**

   The ALG is a breathing air system based on the adsorption dryer MSD. The adsorption dryer was expanded by a processing stage with more specialized adsorbents. The breathing air unit includes two prefilters and one afterfilter.

3. **OFP**

   The OFP is a purification package based on the adsorption dryer MSD. The adsorption dryer was expanded by a processing stage with more specialized activated carbon. The purification package includes three prefilters and one afterfilter.

Pre-filter with condensate drain

The pre-filtration of the medium at the HED / ALD / MSD is to be done by a depth filter
Oil, water and dirt particles are trapped in the micro-fibre mat.
The micro-fibre mat is surrounded by a coalescence filter sheath and the flow is from the inside to the outside. Liquid aerosols and mists are aggregate into bigger droplets in this coalescence filter and fall to the lower part of the filter casing, where they are removed from the system via a condensate discharge line.

For ALG, an additional depth filter element is used.
For OFP, two additional depth filter element is used.

Afterfilter

The particle filter, located after the unit, cleans the compressed air of fine dust. The flow through the filter element is from outside to inside, since this results in a greater effective filtration area.

4 Technical Data

4.1 Technical Data HED / ALD / MSD

Specifications	**HED/ALD/MSD 0050 - 1000**
Function:	Fully automatic, heatless regenerating for continuous operation
Power supply	
Power supply (to be provided by customer), according to implementation	230 V / 50-60 Hz (±10%) 115 V / 50-60 Hz (±10%) 24 V DC (±10%)
Power cord	AC: 3x0.75 mm^2 DC: 2x0.75 mm^2
Power consumtion and internal fuse	Max. 40 W / 2 A time-lag, 250 V, ceramic fuse
Nominal voltage of solenoid valves contact	230 V AC 115 V AC 24 V DC
Nominal current of solenoid valves contact	8 A (ohmic load)
Nominal voltage of alarm relay contact	125 V
Nominal current of alarm relay contact	1 A (ohmic load)
Protection class	IP54
Overvoltage category	2
Design data	
Medium	Compressed air/ nitrogen
Operating overpressure	min. 4 bar / max. 16 bar
Medium temperature	max. 50°C
Pressure dewpoint	HED : min. -20°C ALD : min. -40°C MSD : min. -40°C (-70°C ≤ PDP ≤ -40°C) *
Ambient temperature	min. +4°C / max. +50°C
Humidity	Max. 100% at 45°C
Place of location	0-2000m NN (indoor area)
Purity of the air at the dryer outlet	
Residual content of water	HED: 0.88 mg/m^3 ALD: 0.11 mg/m^3 MSD: 0,0027 mg/m^3 – 0,11 mg/m^3
Pressure vessel	
Design overpressure	16 bar
Tested overpressure (water)	24 bar
Design temperature	-10°C to +60°C

Piping connections	
See chapter 14.1, appendix “Technical Data“	
Desiccant	
HED	Ultrasorp 16
ALD	Ultrasorp 16
MSD	Ultrasorp 4
The details provided are general design or system limiting values. Actual limits for relevant adsorption dryers can be found in the design information. See also appendix chapter 14.1 “Technical Data”.	

* on request

4.2 Technical Data ALG

Specifications	**ALG 80 S – 375 S**
Function	Fully automatic, heatless regenerating for continuous operation
Power supply	
Power supply (to be provided by customer), according to implementation	230 V / 50-60 Hz (±10%) 115 V / 50-60 Hz (±10%) 24 V DC (±10%)
Power cord	AC: 3x0.75 mm^2 DC: 2x0.75 mm^2
Power consumtion and internal fuse	Max. 40 W / 2 A time-lag, 250 V, ceramic fuse
Nominal voltage of solenoid valves contact	230 V AC 115 V AC 24 V DC
Nominal current of solenoid valves contact	8 A (ohmic load)
Nominal voltage of alarm relay contact	125 V
Nominal current of alarm relay contact	1 A (ohmic load)
Protection class	IP54
Overvoltage category	2
Design data	
Medium	Compressed air
Operating overpressure	min. 4 bar / max. 16 bar
Medium temperature	Max. 50°C
Pressure dewpoint	min. -40°C
Ambient temperature	min. +4°C / max. +50°C
Humidity	Max. 100% at 45°C
Place of location	0-2000m NN (indoor area)
Residual contents of contaminants	
Residual content of water	0,11 mg/m^3
Carbon dioxide	< 500 ppm
Carbon monoxide	< 5 ppm
Oil / oil vapours	< 0,01 mg/m^3 / < 0,003 mg/m^3
Sulphur dioxide	< 1 ppm
Nitrogen oxide	< 2 ppm
Solid particles	Class 2, ISO 8573-1:2001
Pressure vessel	
Design overpressure	16 bar
Tested overpressure (water)	24 bar
Design temperature	-10°C to +60°C

Piping connections
See chapter 14.1, appendix “Technical Data“
Desiccant
Ultrasorp SP (70%) Ultrasorp 4 (30%)
Activated carbon
Ultrasorp AK
OX
Ultrasorp OX
The details provided are general design or system limiting values. Actual limits for relevant adsorption dryers can be found in the design information. See also appendix chapter 14.1 “Technical Data”.

4.3 Technical Data OFP

Specifications	**OFP 0050 - 1000**
Function	Fully automatic, heatless regenerating for continuous operation
Power supply	
Power supply (to be provided by customer), according to implementation	230 V / 50-60 Hz (±10%) 115 V / 50-60 Hz (±10%) 24 V DC (±10%)
Power cord	AC: 3x0.75 mm^2 DC: 2x0.75 mm^2
Power consumtion and internal fuse	Max. 40 W / 2 A time-lag, 250 V, ceramic fuse
Nominal voltage of solenoid valves contact	230 V AC 115 V AC 24 V DC
Nominal current of solenoid valves contact	8 A (ohmic load)
Nominal voltage of alarm relay contact	125 V
Nominal current of alarm relay contact	1 A (ohmic load)
Protection class	IP54
Overvoltage category	2
Design data	
Medium	Compressed air/ nitrogen
Operating overpressure	min. 4 bar / max. 16 bar
Medium temperature	Max. 50°C
Pressure dewpoint	min. -40°C
Ambient temperature	min. +4°C / max. +50°C
Humidity	Max. 100% at 45°C
Place of location	0-2000m NN (indoor area)
Purity of the air at the dryer outlet	
Residual content of water	0,11 mg/m^3
Residual content of oil	0,003 mg/m^3
Pressure vessel	
Design overpressure	16 bar
Tested overpressure (water)	24 bar
Design temperature	-10°C to +60°C

Piping connections
See chapter 14.1, at appendix „Technical Data“
Desiccant
Ultrasorp 4
Activated carbon
Ultrasorp AK
The details provided are general design or system limiting values. The actual limits for relevant adsorption dryers can be found in the design information. See also appendix chapter 14.1 “Technical Data”.

5 Before Installation

5.1 Transport and Installation

Here you will find information on:

- how to correctly and safely transport and set up the unit

The heatless-regenerating adsorption dryers HED/ALD/MSD are packed in a box, which is delivered on a wooden pallet. ALG and OFP are packed in a wooden box.

Please make a note of the symbols on the packing.

5.1.1 Safety hints concerning transport

Take special care in transporting or loading and unloading the unit. Never use force!

Ensure that the maximum safe loading limits of the load-bearing members are never exceeded at the place of installation (see chapter 14.1 “Appendix”).

If using a fork-lift truck for transport, ensure that the unit is only lifted by the carrying frame for the unit or under the wooden pallet.

Beware of unequally-distributed loads! This can cause severe injuries when transporting with lifting gear!

Ensure that the angle from the horizontal to the position of the ropes is never less than 45°. Otherwise it could cause leaks in the piping of the unit and even lead to serious malfunctioning to the dryer.

Under no circumstances should the dryer be transported by the piping, as this could cause it. leaks in the piping of the unit and even lead to serious malfunctioning of the dryer.

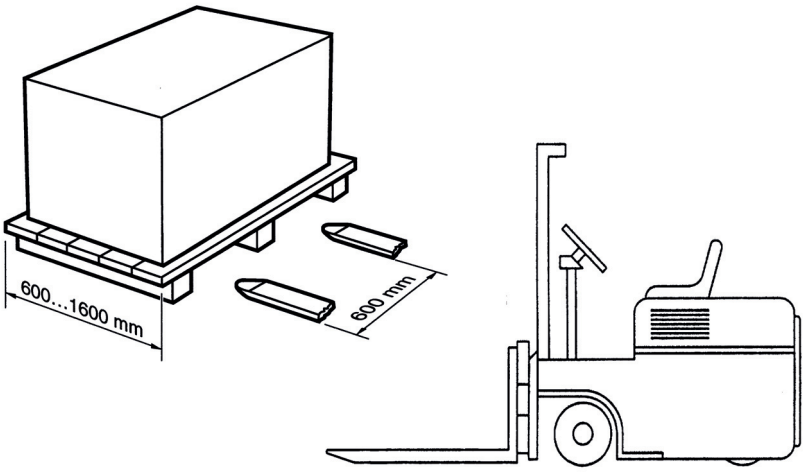

6 Installation

☝ The operator of the unit is responsible for the correct installation and layout of the piping leading to and from the unit.

☝ The manufacturer is not responsible for the installation of protection devices to protect against power surges, short-circuits, and overloads.

6.1 General Hints

- If the unit is to be integrated into an existing pipeline, take into consideration that the existing piping sections may still be contaminated after the installation prior to initial start-up and commissioning. If necessary, these piping chapters and components must be cleaned or replaced.
- Never remove individual filters or blanking plates from the system without replacing them first, prior to start-up. Otherwise, this could lead to limited funcionality of the unit.
- High performance dryer HED/ALD/MSD / ALG / OFP should be set up vertically correctly oriented for air flow.
- Ensure that the dryer is not set up so the direction of airflow is reversed (Exception: intermittent operation).
- The dryer must not be started against large volumes of atmospheric pressure or vacuum (see also chapter 4).
  This can be prevented by using an automatic starting device (optional).
- In the same way, avoid parallel switching of multiple dryers without separate volume flow limiters.
- If the compressor is not operated continuously, it is possible to couple the compressor controller and the dryer controller (option: Intermittent Operation, chapter 6.5).
  In all cases, ensure that the current regeneration cycle is completed after switching off the compressor.

6.2 Installation Hints

- During installation, ensure that the housing cabinet plates can be removed for service and maintenance work.
- The unit can be supplied with compressed air from all usual market compressors. However, ensure that the inlet conditions of the compressed air are guaranteed at the inlet of the unit. The inlet of the compressor may not be located at a point where there are excessive contaminants and pollutants (in direct proximity of machine exhaust gases or other sources of contamination).

Removing the packing materials

Remove the packing materials with care!
Immediately report of any damaged machine parts or missing parts as a result of transport to the manufacturer and the transporting company.
Document any unit damage and inform the manufacturer in detail.

Location site

- If the ambient temperature at the installation site falls below +2 °C, the unit must be equipped with auxiliary heating to protect against frost (optional).
- Ensure that the installation site is clean and provides accessibility from all sides of the unit. Take special care that there is a sufficient room to swap over the unit or perform maintenance on it.
- Ensure that the load-bearing weight of the floor is flat, level and can support the weight of the unit.
- Ensure that any vibration or pulsations from other units or machinery is not transmitted to the dryer.
- Ensure that the electrical outlet and/ or the circuit breaker are accessible.

Bypass line (optional)

A bypass line should be installed around the unit so the compressed air can still be supplied to the network if maintenance work is being performed on the unit.

6.3 Connection to the Compressed Air Network

Properly connect the unit to the moist gas inlet and to the dry gas outlet. Check that all screw connections have been installed properly.

Compressed air quality

HED/ALD/MSD
The maximum permissible residual oil content in the compressed air before entering the dryer is 3 mg/m^3. An additional pre-filter should be installed if higher residual oil contents are encountered.

If oil-free compressed air is required, an oil vapour adsorber should be installed after the dryer.

If sterile compressed air is required, a high-performance sterile filter should be installed after the dryer.

ALG/ OFP
If sterile compressed air is required, a high-performance sterile filter should be installed after the dryer.

6.4 Electrical Connection

Any work on electrical power supply must be performed by a trained electrician according to DIN VDE stipulations and the regulations of the relevant power supply company.

The connection to the electrical controller must be installed with the supplied power cord, which has an earthed plug, or with an external wiring.

The unit has to be provided with an electrical power supply of 230/ 115 V AC res. 24 V DC and protected with an 1.6 A fuse.

If an external power cord is used, a circuit breaker (external switch) has to be installed near the unit. An external power cord of 3x 0.75mm^2 (AC) or 2x 0.75mm^2 (DC) should be used.

Important!

The ends of the cable connected to the controller must be installed with wire nuts.

All electrical connections must be checked before initial start-up and commissioning. Electrical connections should only to be performed by qualified electricians.

6.5 Intermittent Operation

If the high performance dryer is operating in the „intermittent operation“ mode, the installation must be performed as per fig. “intermittent operation” in the following sequence: compressor (A) – dryer (B) – reservoir tank (C).

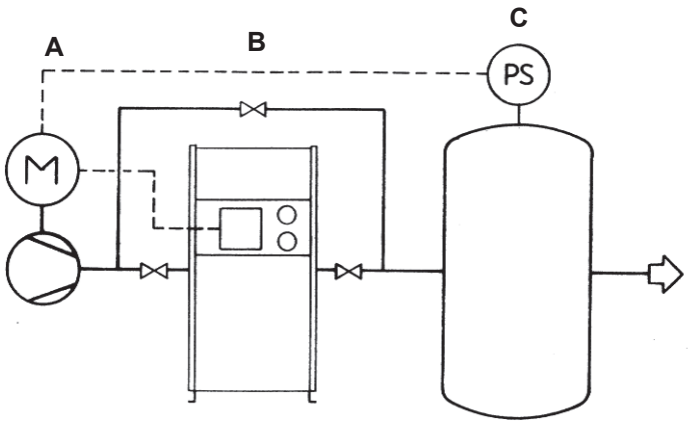

Intermittend operation

Ensure that the dryer can be back-flushed!

7 Start-up

In this chapter we will explain to you:

- Initial start-up
- shutdown
- how to release the pressure from the unit

7.1 Initial Start-up

Before the initial start-up and commissioning of the unit, the pressure vessel must be provided with the necessary safety devices, such as suitable safety devices to prevent an excessive build-up of pressure, safety valves, etc.
These items are not part of the scope of supply of the manufacturer.

It is recommended that the initial start-up be performed by the manufacturer after-sales service.

Taking in account the information in chapter 5.1, follow the initial start-up procedure below:

1 Verify that valves A and B (bypass line optional) are closed and that the electrical controller is switched off.

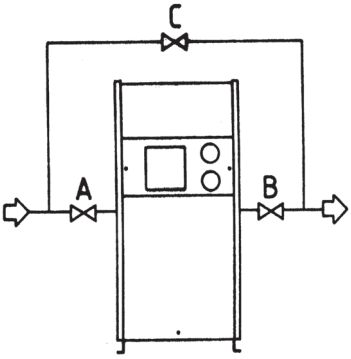

By-pass line

2 Slowly build up the pressure in the dryer by gradually opening valve A.

3 Monitor the pressure on the pressure gauge. Both adsorbers must be at operating pressure.

4 Apply power to the electrical controller.

5 The controller starts with the pressure build-up phase in both adsorbers. Then, the regeneration phase begins in one of the adsorbers and the adsorption phase in the other adsorber.

6 Note that moisture from the ambient air can get into the desiccant from transport or storage of the dryer. Therefore, the dryer must be regenerated for at least three hours before the initial start-up (before butterfly valve B is opened to the compressed air network).

7 Slowly open valve B to integrate the dryer into the compressed air network.

8 Close valve C if open.

The following mechanical dangers can occur during unit during operation:

Violent depressurisation of pressure components via the silencer.

Loud discharge noises when depressurizing the components. Wear ear protectors for personal safety!

7.2 Shutdown

The following procedure shuts down dryers in in continuous operation:

1. Close the cut-off device after the dryer (valve B, see fig. on page 26).
2. Leave the controller in operation until both adsorbers have regenerated fully.
3. Terminate the operation of the controller by cutting off the control box from the mains power supply.

Under no circumstance, should compressed air continue to flow through the dryer after shutdown. Failure to comply may cause the desiccant to overload, and therefore, cannot be regenerated again within the dryer unit.

Please note that dryers operated in situations where there is an intermittent demand for compressed air must have a controller installed to regulate the intermittent operation.

7.3 Depressurising the Unit

1. Shut down the unit properly (see chapter 7.2).
2. Close cut-off devices A and B (see fig. „By-pass line“ on page 26).
3. Depressurize the unit by slowly opening the manual discharge valve at the afterfilter.

Loud discharge noises during depressurization! Wear ear protectors for your own safety!

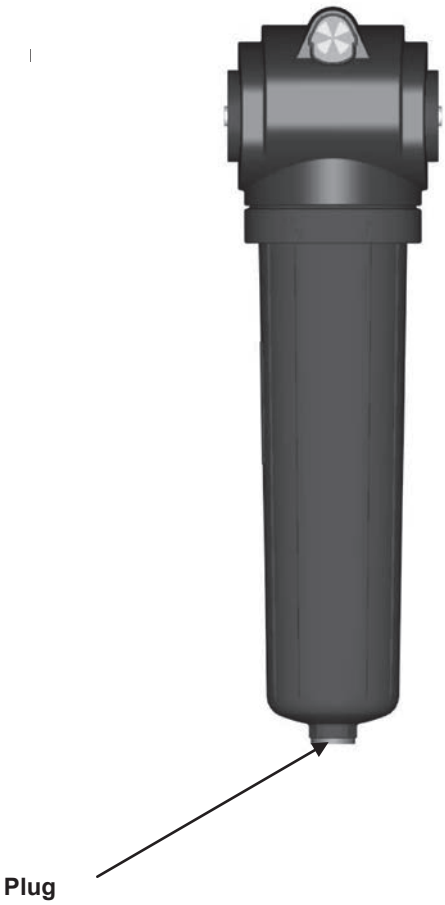

Afterfilter

8 Unit Description

In this chapter we will explain you:

- Parts of the unit
- Function of the unit

8.1 Parts of the Unit

8.1.1 Parts of the unit HED /ALD / MSD 0050-1000

1:	Adsorber (MS-Stage)	9:	Shuttle valve
2:	Gas distributor	10:	Control
3:	Prefilter (S)	11:	Condensate drain
4:	Afterfilter (V)	12:	Ball valve
5:	2/2-way solenoid valve	13:	Ball valve (only dewpoint control)
6:	Regeneration air orifice	14:	Dewpoint transmitter (only dewpoint control)
7:	Silencer	15:	Inline filter (only dewpoint control)
8:	Pressure gauge		

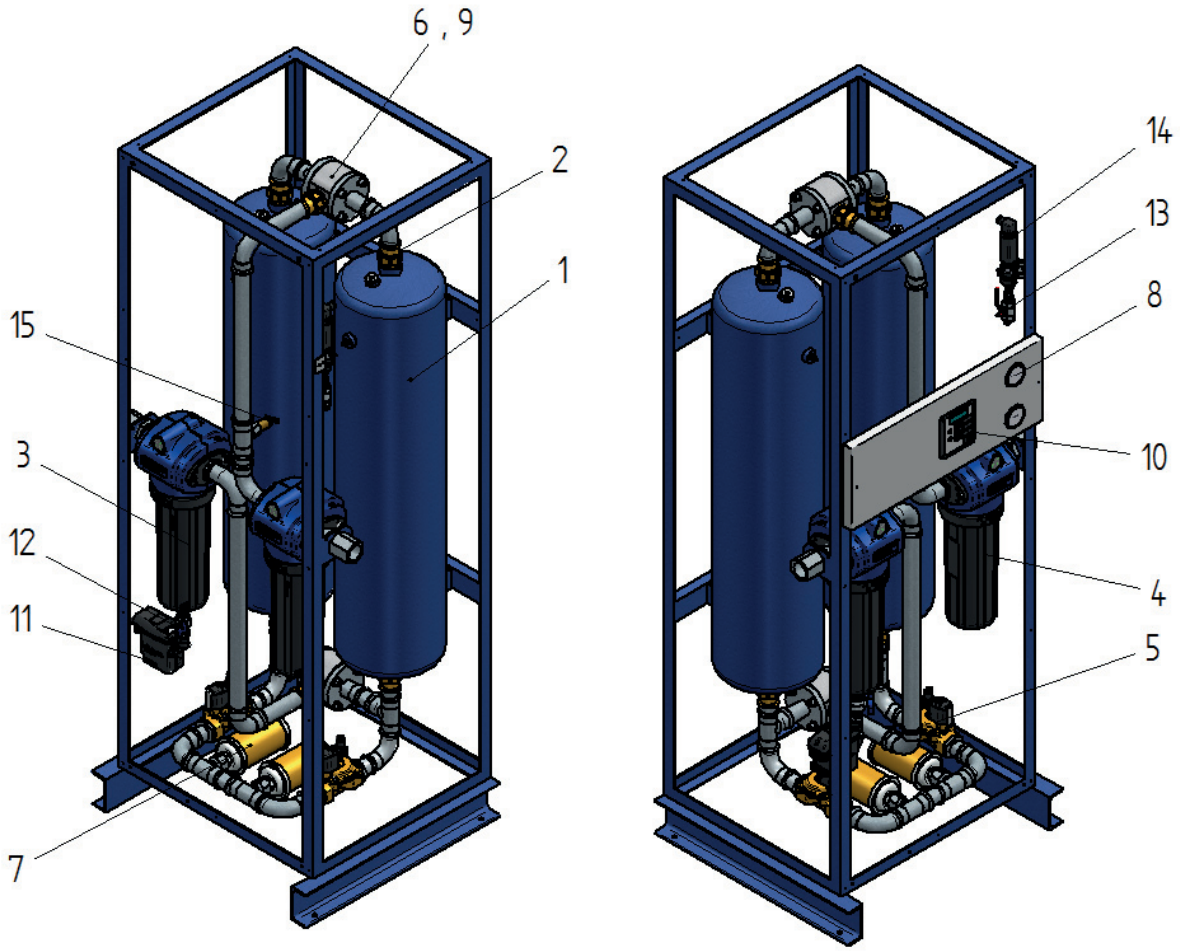

8.1.2 Parts of the Unit ALG 80 S-375 S

1:	Adsorber (SP stage)	12:	Condensate drain
2:	--	13:	Regeneration air orifice
3:	Adsorber (AK + OX stage)	14:	Pressure gauge
4:	Gas distributor	15:	Ball valve
5:	---	16:	Control
6:	1. Prefilter (M)	17:	Additional control
7:	2. Prefilter (S)	18:	Ball valve (only dewpoint control)
8:	Afterfilter (S)	19:	Dewpoint transmitter (only dewpoint control)
9:	Shuttle valve	20:	Inline filter (only dewpoint control)
10:	2/2-way solenoid valve		
11:	Silencer		

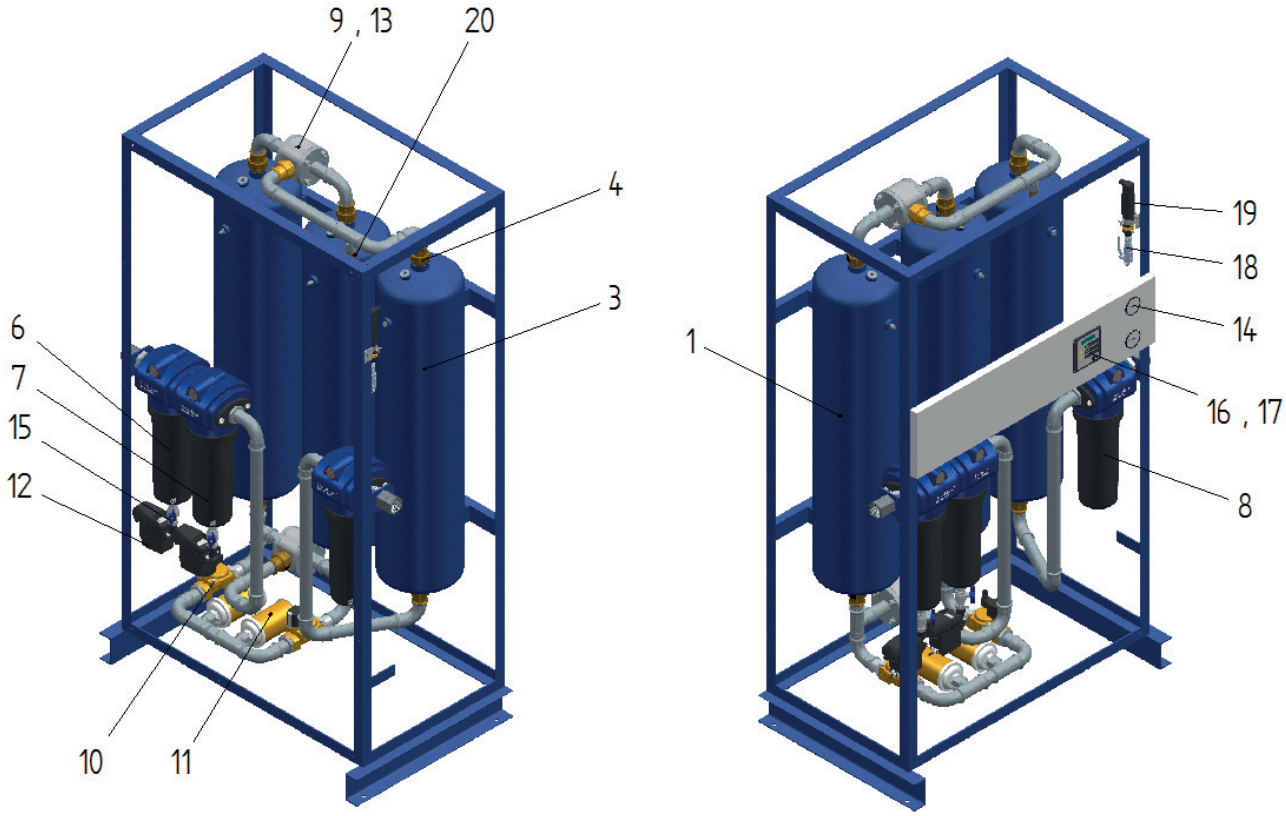

8.1.3 Parts of the Unit OFP 0050-1000

1:	Adsorber (MS stage)	13:	Regenerationair orifice
2:	Adsorber (AK stage)	14:	4/2-way solenoid valve
3:	Gas distributor	15:	Pressure gauge
4:	1. Prefilter (V)	16:	Differential pressure gauge
5:	2. Prefilter (M)	17:	Ball valve
6:	3. Prefilter (S)	18:	Pressure reducing valve
7:	Afterfilter (S)	19:	Control
8:	Shuttle valve	20:	Additional control
9:	Piston valve / Butterfly valve	21:	Ball valve (only dewpoint control)
10:	2/2-way solenoid valve	22:	Dewpoint transmitter (only dewpoint control)
11:	Silencer	23:	Inline filter (only dewpoint control)
12:	Condensate drain		

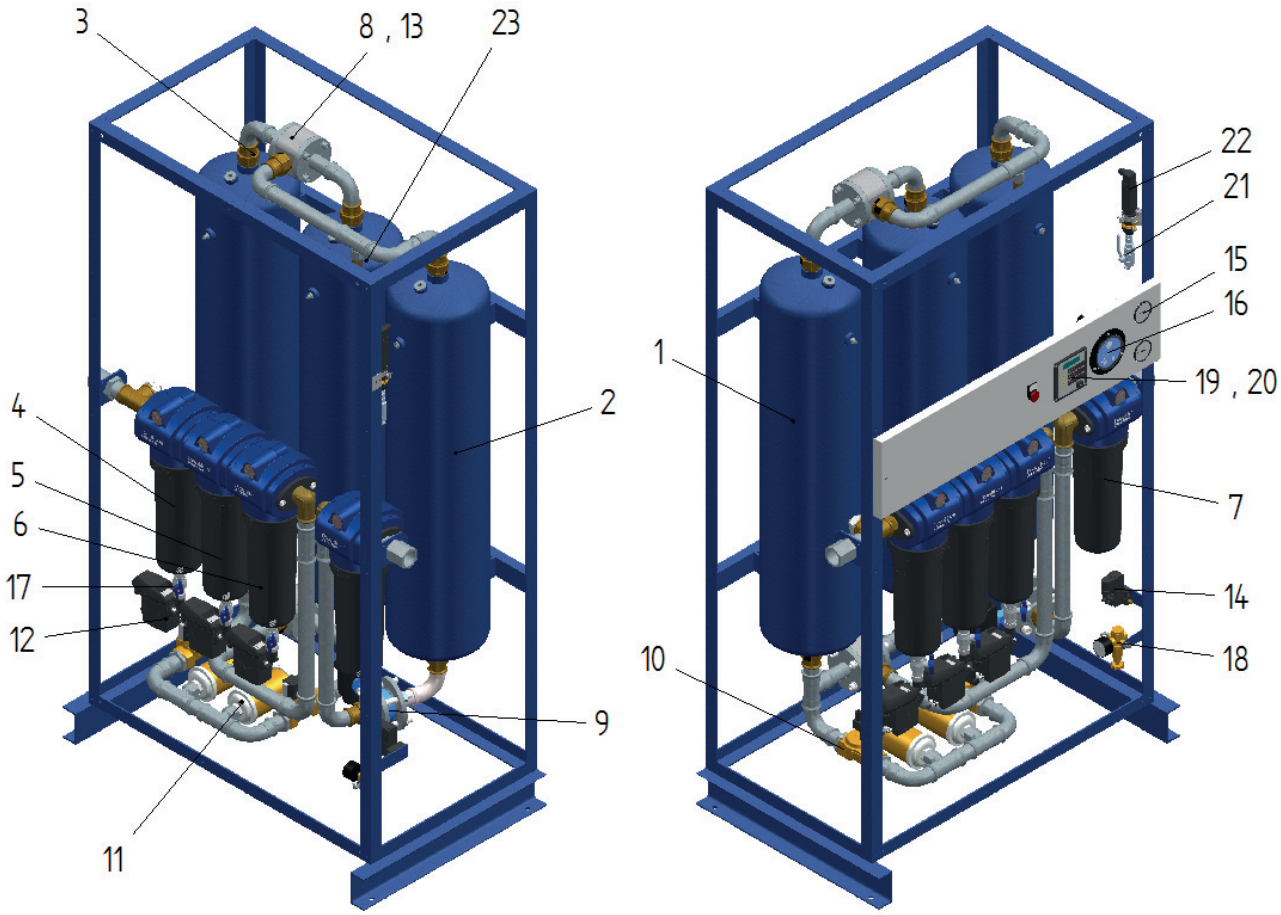

8.1.4 Connections Board

Basic controller board HED/ALD/MSD/ALG/OFP

The connections are screwless terminals (spring-terminals).

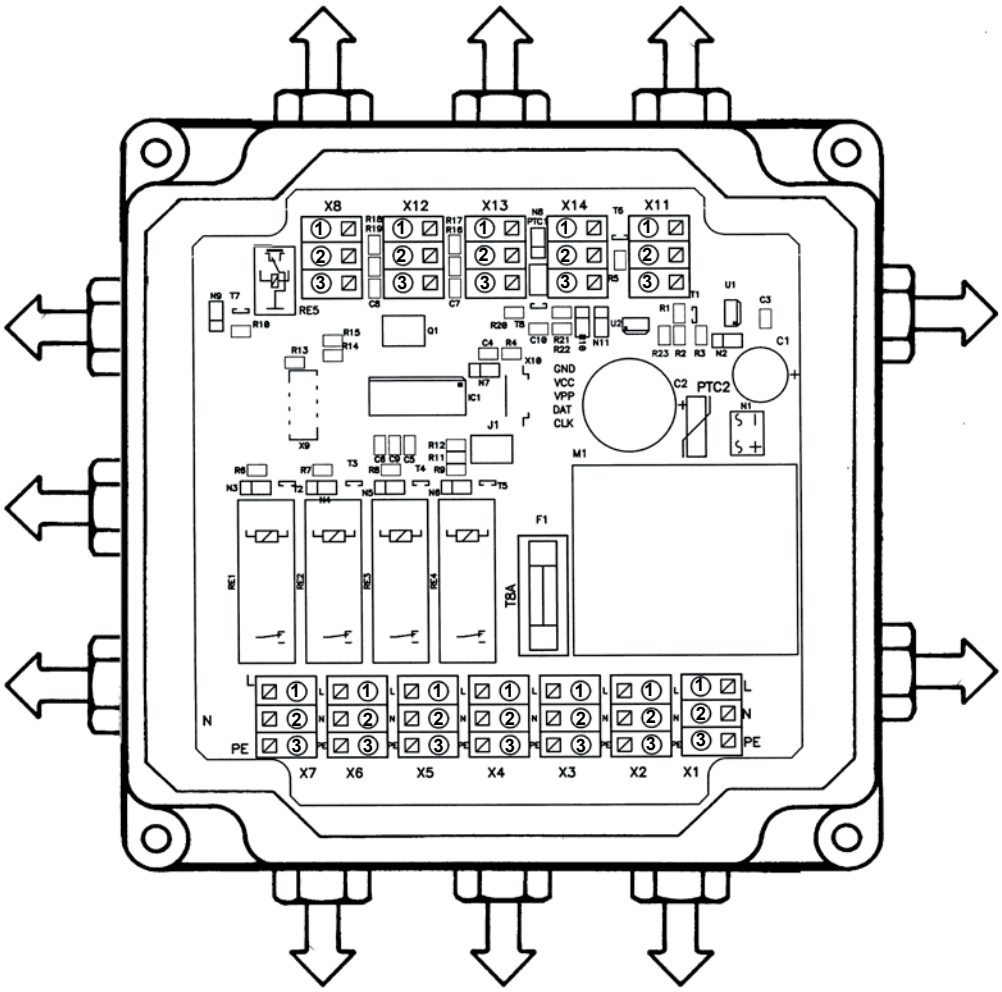

Connection	Terminal	Terminal contact		
		1	2	3
Power supply 115 V AC / 230 V AC / (24 V DC)	**X1**	L1 (+)	N (+)	PE
Outlet 115 V AC / 230 V AC / (24 V DC)	**X2**	L1 (+)	N (+)	PE
Regeneration valve vessel 1	**X3**	L1 (+)	N (+)	PE
Regeneration valve vessel 2	**X4**	L1 (+)	N (+)	PE
Adorption valve vessel 1	**X5**	L1 (+)	N (+)	PE
Adorption valve vessel 2	**X6**	L1 (+)	N (+)	PE
Stand-by valve	**X7**	L1 (+)	N (+)	PE
Alarm-outlet (change-over contact, potential free)	**X8**	NC	Common	NO
Power supply 12 V DC/ Alarm 1 input condensate drain	**X11**	(-) GND	Alarm drain	(+) 12 V
Intermittent operation	**X12**		(-) GND	Intermit.
Alarm 2 input (differential pressure alarm, only for OFP)	**X13**		(-) GND	Alarm OFP
Dewpoint transmitter	**X14**		(-) Dewpoint	(+) 12 V

Additionally controller board ALG/OFP

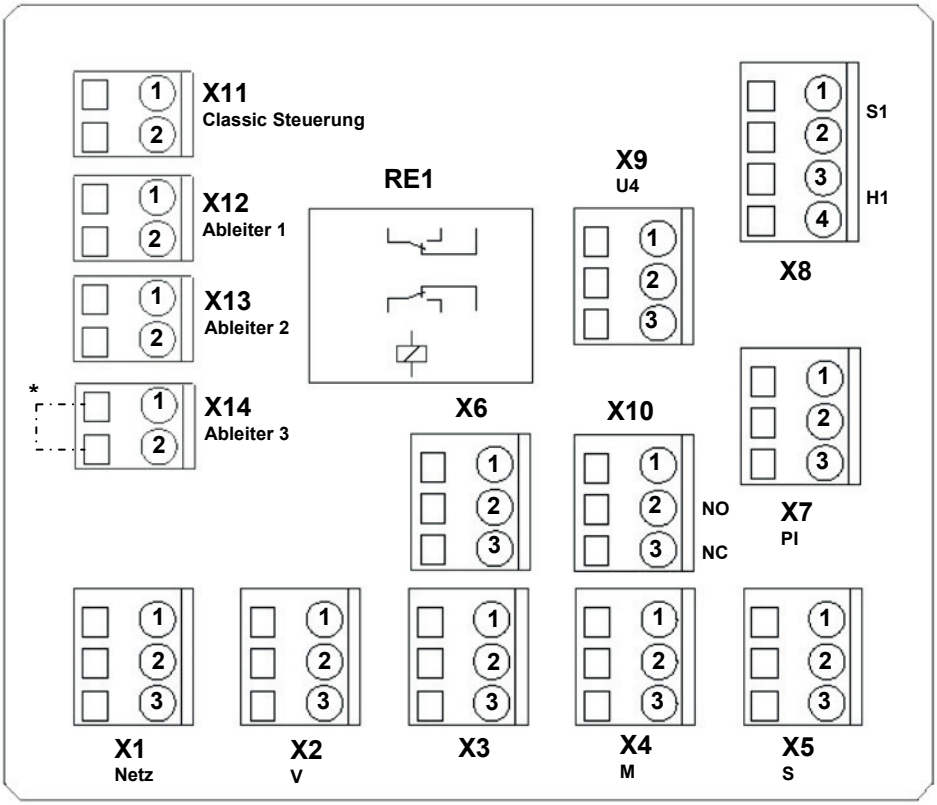

* = only for ALG

Connection	Terminal	Terminal contact			
		1	2	3	4
Power supply 115 V AC / 230 V AC / (24 V DC)	X1	L1 (+)	N (+)	PE	
Outlet-condensate drain, prefilter V, 115 V AC / 230 V AC / (24 V DC)	X2	L1 (+)	N (+)	PE	
Power supply for basic controller board 115 V AC / 230 V AC / (24 V DC)	X3	L1 (+)	N (+)	PE	
Outlet-condensate drain, prefilter M, 115 V AC / 230 V AC / (24 V DC)	X4	L1 (+)	N (+)	PE	
Outlet-condensate drain, prefilter S, 115 V AC / 230 V AC / (24 V DC)	X5	L1 (+)	N (+)	PE	
OFP alarm outlet	X6	x		x	
Differential pressure prefilter PI	X7	x	x	PE	
Malfunction S1	X8	x	x		
Acknowledge malfunction H1				x	x
Dryer outlet U4	X9	L1 (+)	N (+)	PE	
Potential free contact (change over contact)	X10	Common	NO	NC	
Classic controller (alarm condensate drain)	X11	(-) GND	Alarm drain		
Drain 1 (alarm)	X12	Pin 3	GND		
Drain 2 (alarm)	X13	Pin 3	GND		
Drain 3 (alarm)	X14	Pin 3	GND		

X= polarity negligible

8.1.5 Frontpanel Standard

HED/ALD/MSD

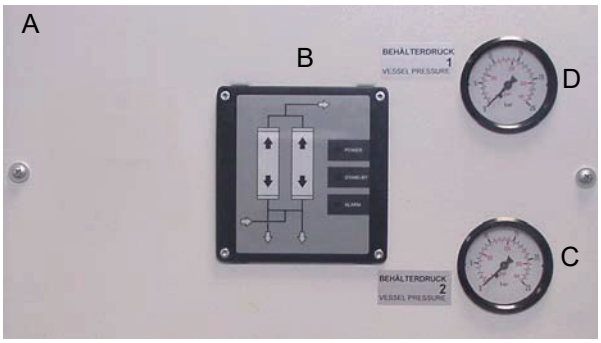

ALG

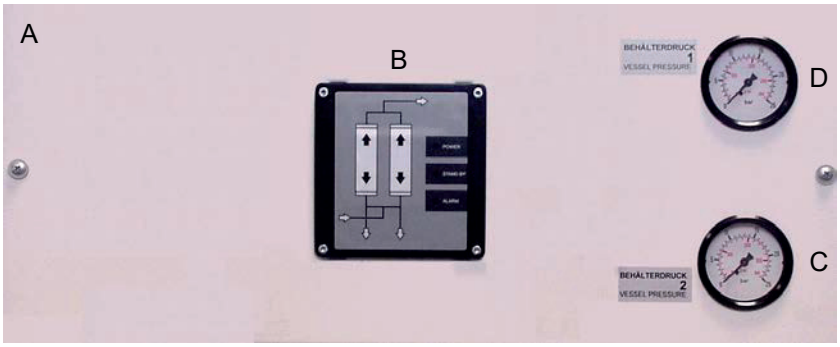

OFP

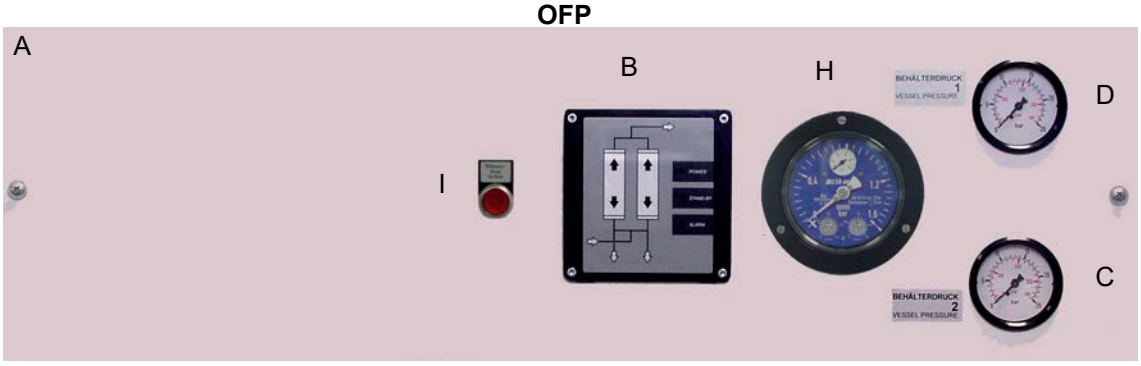

A:	**Frontpanel**	**H:**	**Differential pressure gauge**
B:	**Electronic controller with display**	**I:**	**Acknowledgement-button malfunction**
C:	**Pressure gauge adsorber 2**		
D:	**Pressure gauge adsorber 1**		

8.1.6 Frontpanel Dewpoint Control

HED/ALD/MSD

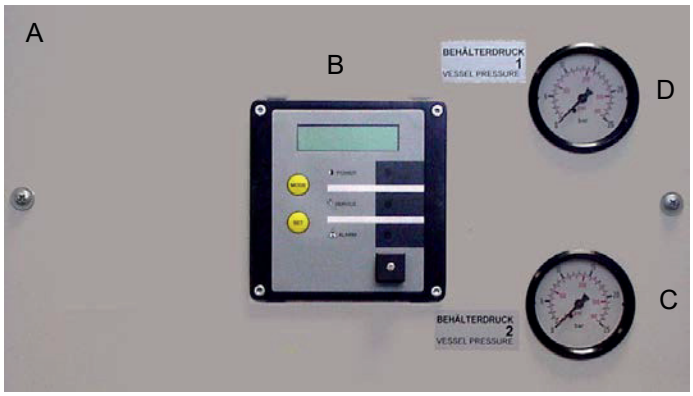

ALG

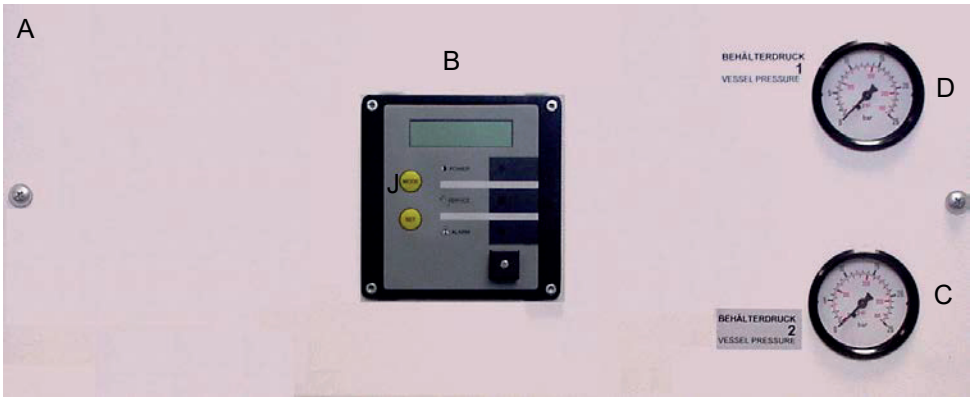

OFP

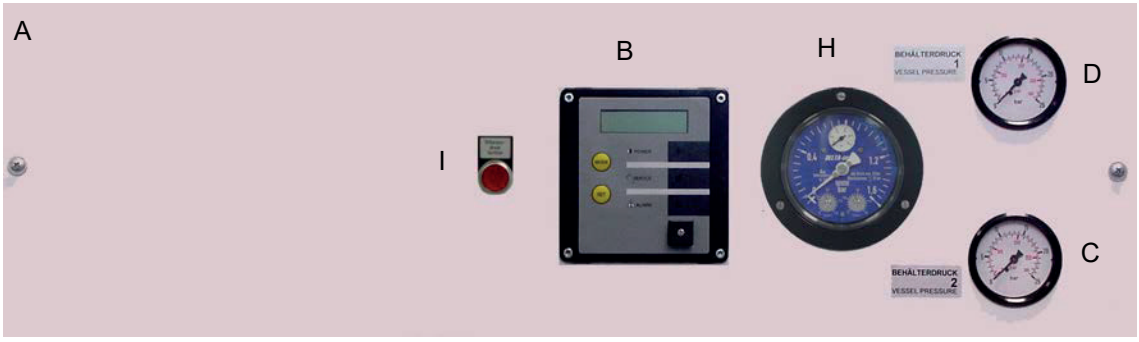

A: Frontpanel
B: Electronic controller with display
C: Pressure gauge adsorber 2
D: Pressure gauge adsorber 1
H: Differential pressure gauge
I: Acknowledgement-button malfunction

9 Function of the Unit

9.1 Function HED/ALD/MSD

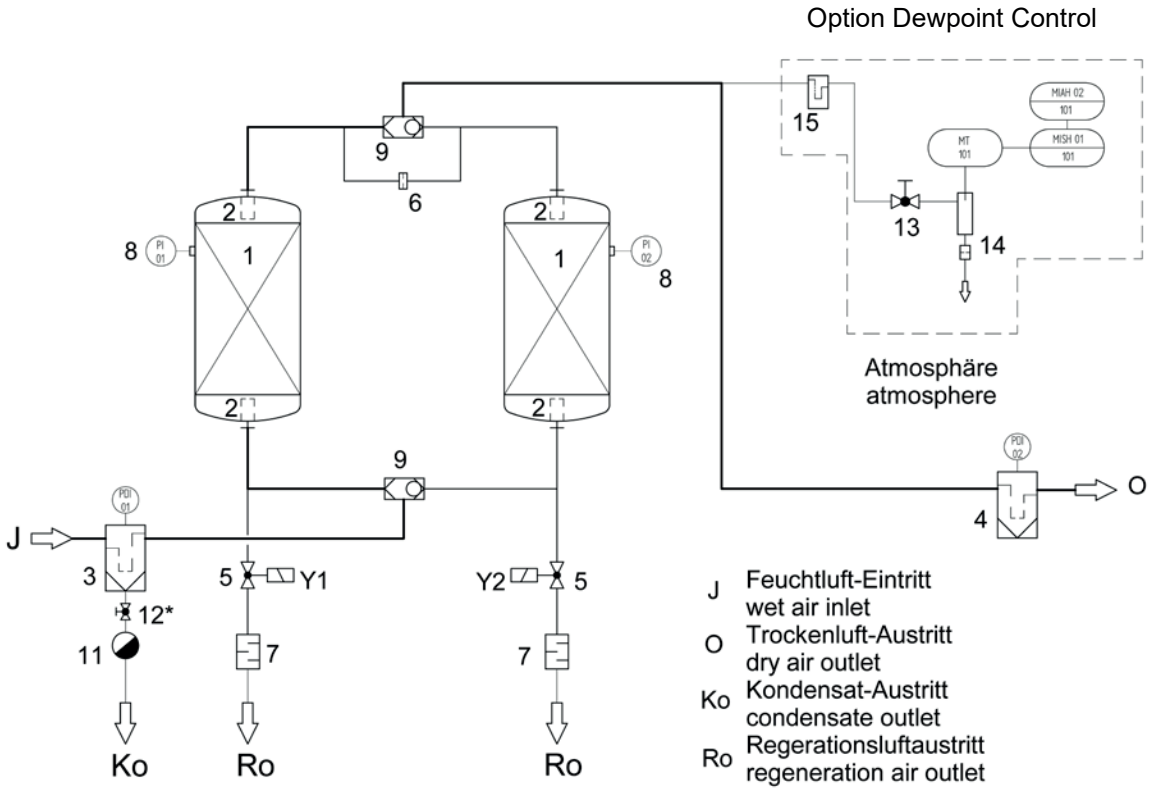

P & I-diagram HED/ALD/MSD 0050-1000

Adsorption

The High-Performance Dryer HED/ALD/MSD is an adsorption dryer with alternating adsorption and regeneration phases.

The medium will be alternately dried in one of the adsorbers while the other adsorber is being regenerated. This procedure ensures continuous operation.

The medium to be dried flows through the moist gas inlet (J) into the prefilter (3). Condensate, oil aerosols and dirt particles are separated out at the high-performance micro-filter.

The medium to be dried flows through the lower shuttle valve (9) and the lower gas distributor (2) from bottom to top through one of the two adsorbers (1).

In the upper part of the adsorber, the dried medium passes through the upper gas distributor (2) and on through the upper shuttle valve (9) to the afterfilter (4).

Fine dust and any abraded desiccant are trapped in the afterfilter, and the dried and purified medium passes into the piping system through the dry gas outlet (O).

Regeneration

Regeneration of the moisture-laden desiccant is achieved with a partial flow of the dried medium.
At the start of regeneration, the 2/2-way solenoid valve (5) at the regeneration gas outlet is opened. In this way the adsorber is brought down to atmospheric pressure. The compressed air passes out of the system through the silencer (7).

A partial flow of the already dried compressed air flows from the adsorbing adsorber via a regeneration gas nozzle (6) located in the shuttle valve from the top to the bottom through the adsorber to be regenerated and through the silencer (7) to the atmosphere.
The amount of gas required for regeneration is limited by the nozzle (6).

Pressure build-up

The 2/2-way solenoid valve (5) is closed at the regeneration gas outlet at the end of the regeneration phase. The pressure in the regenerating adsorber builds up via the regeneration gas nozzle (6).
The regenerated adsorber remains at operating pressure in stand-by mode until the switch-over procedure is initiated

Switching-over Procedure of the Unit

According to the configuration of the unit, the switching-over procedure can either be done on a timed or load-dependent basis (see chapter 9.4).

Intermittent Operation

There is an option to couple the controller of the dryer with the controller of the compressor during discontinuous (intermittent) operation of the compressor. This ensures that regeneration of the dryer will not be interrupted.
The dryer remains in stand-by mode after pressure built-up has finished if no compressed air is used.

Coupling the control of the dryer with the control of the compressor is done by connecting the potential-free make contact at the compressor to connector block X11 (digital input) of the controller board. The contact must be closed when the compressor is not in operation.
The condition “Stand-By” will be indicated at standard controller by a LED, at dewpoint controller on the display in clear text.

This operation mode can only be used if the dryer is located directly downstream the compressor and a reservoir tank is directly connected downstream the dryer. The air content of the reservoir tank must be high enough to finish the regeneration of the adsorption dryer without restarting the compressor.

9.2 Function ALG

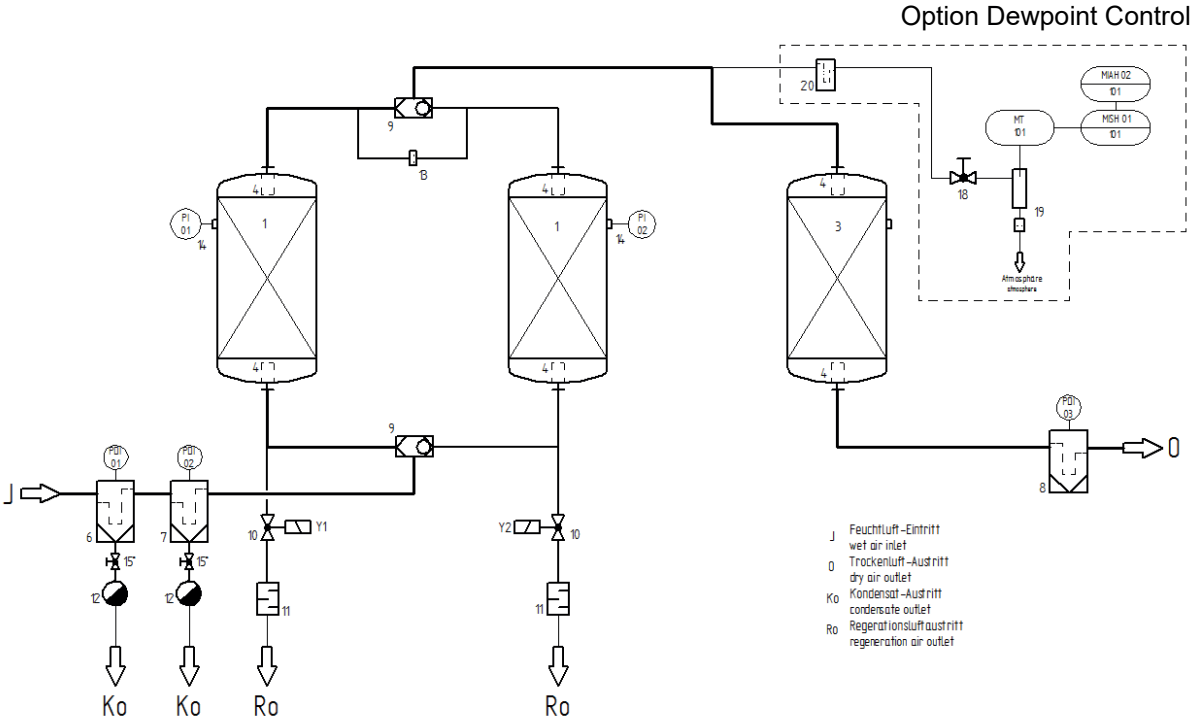

P & I-diagram ALG 80 S - 375 S

The breathing air unit ALG is used to treat compressed air according to quality standard of all relevant international standards (including EN 12021 (DIN 3188); ANSI/CGA G.7.1; Z 180,1 M85; BS 4275; AS 2299-1979; NZS 5813, etc.). It can be used downstream of oil-lubricated or oil-free compressors.

It is used in cases of critical applications in which the ambient air or compressed air presents a potential hazard to the user without suitable treatment.
The breathing air unit produces compressed air free of particles, oil, water and water vapour and also removes carbon dioxide (CO_2) and carbon monoxide (CO). The breathing air unit can be used as a central treatment station or in the decentralised area.

Adsorption

The ALG is an adsorption dryer with alternating adsorption and regeneration phases is integrated in the ALG. The medium will be alternately dried in one of the adsorbers while the other adsorber is being regenerated. This procedure ensures a continuous operation.

The medium to be dried flows through the moist gas inlet (J) into the prefilter combination (6, 7). Condensate, oil aerosols and dirt particles are separated here on high-performance micro-filters.

The medium flows through the lower shuttle valve (9) and the lower flow distributor (4) from the bottom to the top through one of the two SP adsorbers (1). The pressure dew point after the adsorption stage is at –40°C, with a residual water content of 0.11 mg/m^3 and CO^2 is adsorbed to a residual content of far below 500 ppm.

In the upper part of the adsorber, the dried medium passes through the upper gas distributor (4) and through the upper shuttle valve (9) into the downstream AK/OX adsorber.

In the subsequent stages in the AK/OX adsorber, active carbons, oil vapours and hydrocarbons are first adsorbed (residual oil content below 0.003 mg/m^3) and the CO is removed up to a residual content of below 5 ppm in a catalytic converter. The purified air then flows through the afterfilter (8).
Fine dust and any potential desiccant (activated carbon) is separated and the dried and purified medium passes into the piping system through the dry gas outlet (O).

Regeneration (dryer stage)

Regeneration of the moisture-laden desiccant is achieved with a partial flow of the dried medium.
At the start of regeneration, the 2/2-way solenoid valve (10) at the regeneration gas outlet is opened. In this way, the compressed air is expanded to atmospheric pressure.
The compressed air exits the system through the silencers (11).

A partial flow of the already dried compressed air flows from the adsorbing adsorber via a regeneration gas nozzle (13) located in the shuttle valve from the top to the bottom through the adsorber to be regenerated and through the silencer (11) to the atmosphere.
The amount of gas required for regeneration is limited by the nozzle (13).

Pressure Build-up (dryer stage)

The 2/2-way solenoid valve (10) is closed at the regeneration gas outlet at the end of the regeneration phase. The pressure in the regenerating adsorber builds up via the regeneration gas nozzle (13).
The regenerated adsorber remains at operating pressure in stand-by mode until the switch-over procedure is initiated.

Switch-over procedure for the unit (dryer stage)

According to the configuration of the unit, the switching-over procedure can either be done on a timed or load-dependent basis (see chapter 9.4).

Intermittent Operation

There is an option to couple the controller of the dryer with the controller of the compressor during discontinuous (intermittent) operations of the compressor. This ensures that the unit only uses compressed air for regeneration, as long as the compressor is operating. The dryer remains in stand-by mode after completing the pressure built-up if no compressed air is used.

Coupling the controller of the dryer with the controller of the compressor is accomplished by connecting the potential-free closing contact on the compressor to the terminal module X12 (digital input) of the controller circuit board. The contact must be closed when the compressor is in operation.
The condition “Stand-By” will be indicated on the standard controller by an LED, in the dewpoint controller on the screen in plain text.

This operating mode can only be used if the dryer is installed directly behind the compressor and a reservoir is directly connected behind the dryer!

9.3 Function OFP

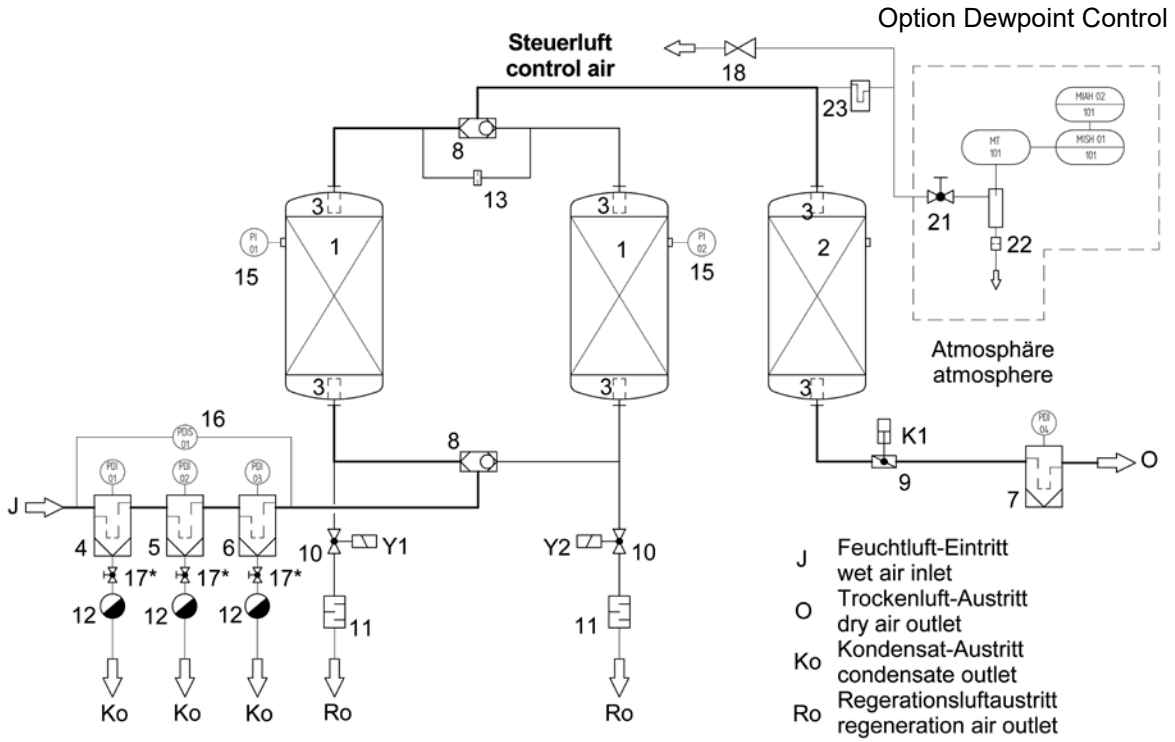

P & I-diagram OFP 0050 - 1000

Adsorption

The Dryer OFP is an adsorption dryer with alternating adsorption and regeneration phases.

The medium will be alternately dried in one of the adsorbers while the other adsorber is being regenerated. This procedure ensures continuous operation.

The medium to be dried flows through the moist gas inlet (J) into the prefilter combination (4,5,6). Condensate, oil aerosols and dirt particles are separated out at the high-performance micro-filter.
The medium to be dried flows through the lower shuttle valve (8) and the lower gas distributor (3) from bottom to top through one of the two adsorbers (1). The moisture is removed from the compressed air until it reaches the desired level.
In the upper part of the adsorber, the dried medium passes through the upper gas distributor (3) and on through the upper shuttle valve (8) into the downstream oil vapour adsorber (2). The purified air next flows through the afterfilter (7).

Fine dust and any abraded desiccant (or activated carbon) are trapped in the dust filter, and the dried and purified medium passes into the piping system through the dry gas outlet (O).

Regeneration

Regeneration of the moisture-laden desiccant is achieved with a partial flow of the dried medium. At the start of regeneration, the 2/2-way solenoid valve (5) at the regeneration gas outlet is opened. In this way the adsorber is brought down to atmospheric pressure. The compressed air passes out of the system through the silencer (11).

A partial flow of the already dried compressed air flows from the adsorbing adsorber via a regeneration gas nozzle (13) located in the shuttle valve from the top to the bottom through the adsorber to be regenerated and through the silencer (11) to the atmosphere.
The amount of gas required for regeneration is limited by the nozzle (13).

Pressure Build-up

The 2/2-way solenoid valve (10) is closed at the regeneration gas outlet at the end of the regeneration phase. The pressure in the regenerating adsorber builds up via the regeneration gas nozzle (13).
The regenerated adsorber remains at operating pressure in stand-by mode until the switch-over procedure is initiated

Switching-over Procedure of the unit

According to the configuration of the unit, the switching-over procedure can either be done on a timed or load-dependent basis (see chapter 9.4).

Protection against breakthrough of oil

The OFP treatment unit makes use of a device to protect against a breakthrough of oil, which works on the following principle:
The prefilter combination is equipped with a contact pressure differential manometer. The differential pressure rises suddenly if there is a breakthrough of the oil.
If the differential pressure more than 1.2 bar, the differential pressure manometer sends a pulse to the gate valve (9) installed before the afterfilter. The gate valve (9) closes at once and prevents the penetration of contaminated air into the compressed air network. The red signal lamp of the clear button in the front panel lights up.

The alarm message can be used and a suitable signalling device (warning light, warning buzzer) can be placed at any desired point. In the controller version “Dewpoint Control” the cut off is indicated on the display in clear text.

If a breakthrough of the oil does happen, then all the filter elements **must** be changed, and the desiccant and activated carbon **replaced**!

Before starting up again, the alarm message must be cleared by the button on the front panel!
The message on the display at dewpoint control will be cancelled automatically, if the oil-breakthrough is stopped and the differential pressure of the pressure gauge shows a normal value.

Intermittent Operation

There is an option to couple the control for the dryer with the control for the compressor during discontinuous (intermittent) operation of the compressor. This ensures that regeneration of the dryer will not be interrupted.
The dryer remains in stand-by mode after pressure built-up has finished if no compressed air is used.

Coupling the control of the dryer with the control of the compressor is done by connecting the potential-free contact at the compressor to connector block X12 (digital input) of the controller board. The contact must be closed when the compressor is not in operation.
The condition “Stand-By” will be indicated at standard controller by a LED, at dewpoint controller on the display in clear text.

This operation mode can only be used if the dryer is located directly behind the compressor and a reservoir tank is directly connected behind the dryer. The air content of the reservoir tank must be high enough to finish the regeneration of the adsorption dryer without restarting the compressor.

9.4 Function of the Electronic Controller

Standard Control

The standard electronic controller for the HED / ALD / MSD / ALG / OFP series offers a display with LEDs to indicate current operating conditions of the dryer. The controller offers a potential free collective alarm, which operates alternately as either a normally open or normally closed contact.
Furthermore, the controller offers “Intermittend Operation", which allows connection to the compressor (see chapters 9.1 - 9.3). This function offers considerable energy savings since the adsorption-dryer only operates when the compressor runs.

Dewpoint Control

The electronic controller of the HED / ALD / MSD / ALG / OFP series offers different options for programming and configuration. The dryer can be customized to optimize cycle-times and reduces air loss for regeneration.

Central controller parameter can be configured directly at the control.
Thus it is guaranteed that the unit can be adapted optimally to the individual requirements.

Via a potential-free contact, a collective-failure signal can be linked for example to a central control station. Furthermore, the controller provides an input, that exchanges signals with the compressor.
This function offers substantial saving potential, since the adsorption dryer works only at intermittent operation if the compressor runs.

The controller is also capable of supporting a dewpoint-dependent capacity control.
The dewpoint-transmitter, which effectively monitors dewpoint changes, decreases energy costs by extending adsorption time while maintaining a consistent dewpoint. The controller display shows current operating conditions as well as service – and alarm-messages in text.

The electronic controller for the HED / ALD / MSD / ALG / OFP series is at modular design.
The basic circuit board is installed in all models. An upgrade from a standard controller to the dewpoint controller can take place if desired.
In order to use the increased energy saving potentials still better, also each controller of the previous version can be updated to the newest controller version, since the newest controller version possesses the same dimensions as the previous version.

ALG and OFP have a second control-circuit board that is added on the basic circuit board.

9.4.1 Time Control

In “Time Control Mode“ the duration of the adsorption cycle of an adsorber is fixed to 5 minutes. This adsorption time is derived from 4 minutes of regeneration time and 1 minute of pressurization time.

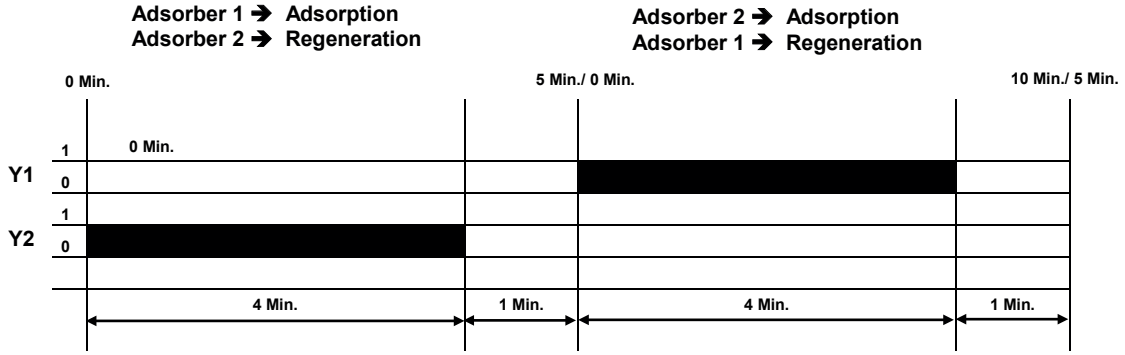

9.4.2 Dewpoint Control

In load-dependent mode, the controller controls the adsorption-cycle of the heatless-adsorption dryers based on actual operating-conditions. The extended adsorption cycle does not change the amount of time required to regenerate the desiccant but it increases the “stand-by duration,” in which the system does not require purged air.

The operation mode (“time control” or “dewpoint control”) can be selected on the text display of the controller.

As part of the criteria for extending the adsorption-cycle, the pressure dewpoint is measured at the dry-air-outlet of the adsorption dryer. A dewpoint transmitter determines the pressure dewpoint. The load-dependent control is managed through the "work-window" in the control-program. This work-window is defined by two temperature set points.

The standard setting values for switching-over point A is - 48°C and for switching-over point B is - 43°C. **Note:** Switch-over point B is set automatically by the control. These values will be used if there are no special customer requests.

If the mode "dewpoint control" is set, the adsorption-dryer adsorbs moisture in one of the two adsorbers as long as the pressure dewpoint has reached the dry-air-outlet value that was set for switch-over point B.

Once reaching the switch-over point B value of -43°C, the controller operates in time-controlled mode until the switch-over point A value of -48°C is reached. The controller operates in the load-dependent cycle again until the pressure dewpoint at the dry-air-outlet is once again, at the set value for switch-over point B.

During the standby-phase (in load-dependent extended cycle), the regenerated adsorber remains under operating pressure allowing an immediate switch over to the regenerated side. The current standby-time is indicated on the display.

9.4.3 Alarm Conditions

Upon an alarm-situation, the controller automatically changes to “safety mode” as indicated on the display (only dewpoint control). By pressing the mode button once, the error can be displayed. If several errors appear, it can be displayed by pressing the mode button again. If an alarm is triggered, it will switch the alarm-outlet terminal X8. The outlet switches a potential-free contact. A red LED located in the housing cover (Standard and Dewpoint Control) will light up.

9.4.4 Alarm Inputs

The controller provides 2 alarm inputs. The condensate drain alarm is connected at terminal contact X11 – 2 and the differential pressure alarm is connected at terminal contacts X13 -2 and X13 – 3. This is only configured for OFP units. Both alarm-inputs are "normally closed" contacts meaning if no alarm-input is used, a wire jumper must be installed there. "Normally closed" contacts are used in order to protect against broken wires.

9.4.5 Software-generated Alarm (only Dewpoint Control)

There are miscellaneous safety-functions in the controller function. Under certain conditions, the alarm will be triggered by the following conditions:

- Dewpoint transmitter open
- Dewpoint transmitter short
- Dewpoint pre-alarm
- Dewpoint alarm

9.4.6 Intermittent Operation

If a potential-free contact of the compressor is connected at terminals X12 - 2 and X12 - 3 (opens upon compressor operation), then intermittent operation becomes active (see also chapters 9.1- 9.3 "Intermittent Operation"). At the beginning of the pressurizing-phase, the compressor run-time will be added up. At the end the adsorption-phase, that value will be compared to the set value (ex: 1 minute). If the time falls short of the set value, the controller closes the regeneration valves and switches to STAND BY mode. When the compressor starts again, the program will automatically continue.

9.4.7 In Case of a Blackout

In case of a power failure, the controller will store its current position in the cycle. After switching on the power supply again, the controller will re-pressurize the system and resume operation at the point where the power failure occurred.

10 Operation

10.1 Functional elements of the Front Panel (Standard/ Dewpoint Control)

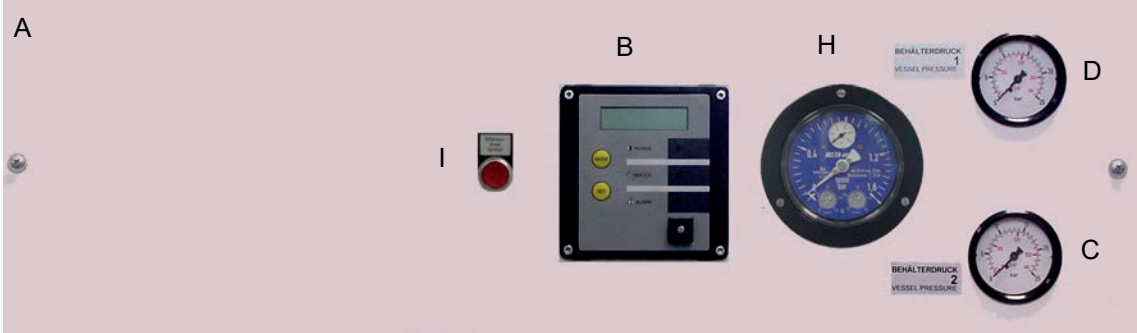

Pressure gauges **D** and **C** indicate actual operating overpressure in the adsorbers.
Display **B** shows operating conditions (version dewpoint control shown).

Only OFP:
Differential pressure gauge **H** shows the pre-filter differential pressure.
The differential pressure is increased during an oil-breakthrough.
The red signal light on the acknowledgement-button lights up. After repair of the unit (replacement of filter, desiccant, and activated carbon), the acknowledgement-button **I** will need to be pressed.

10.2 The Display (Standard-Version)

After start-up of the unit, the current operating-conditions will be indicated by LED´s on the display.
The controller operates automatically, no more user steps are rquired.

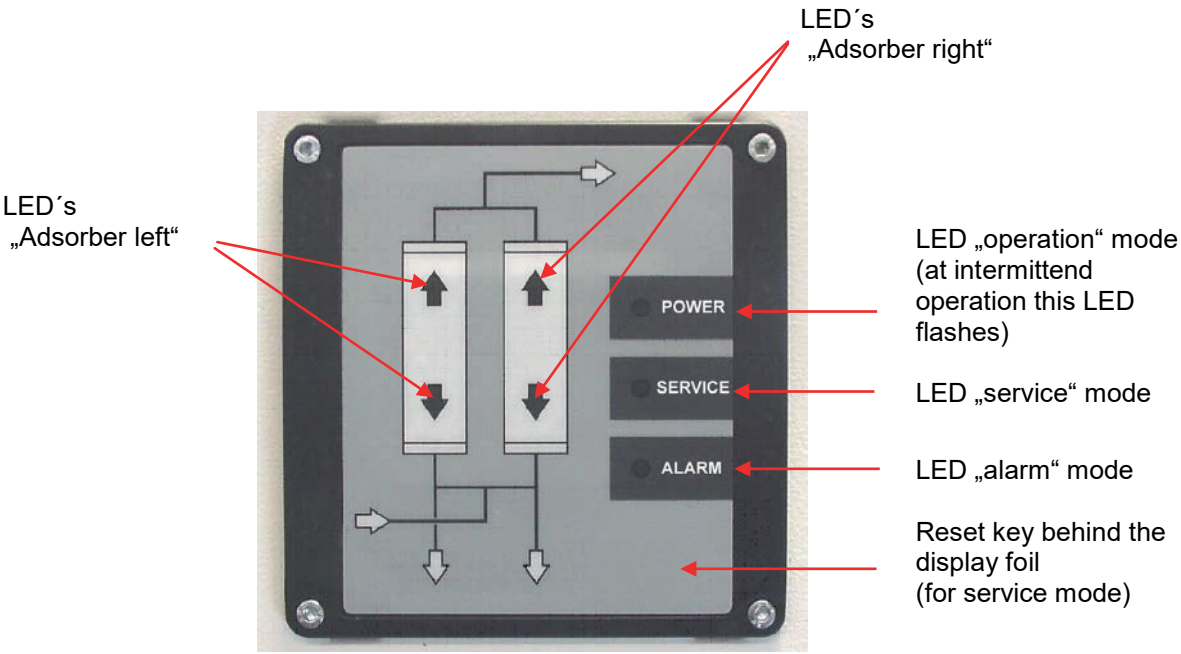

10.2.1 Service Messages (Standard Version)

There are 2 different service indications, in the operating mode by means of the service LED and in the service mode by means of adsorber LED's.

The indication of the messages is done with 3 different symbols:

Indication of the service LED in operating mode (flashing):
Service A = short-long / Service B = short-long-long / Service C = short-long-long-long.

Indication of the Service-LED in service mode:
3s permanent shining or 3x short flashing.

Indication of the adsorber LED´s in service mode (flashing), the service message is activated, that means, the time for neccessary service is reached.

Indication of the adsorber LED´s in service mode (permanent shining), the service message is not activated, that means, the time for the necessary service is not reached. In operation mode this LED´s indicate the current operating condition.

Service message in operating mode:
The service LED flashes, the corresponding adsorber LED´s shine permanent and indicate the current operating condition.

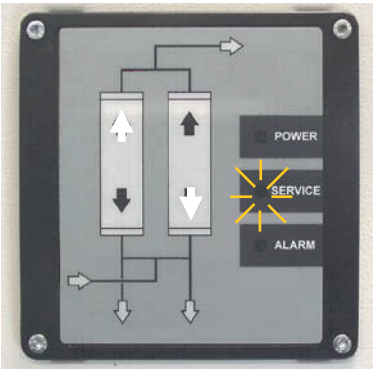

Switching over to the service mode

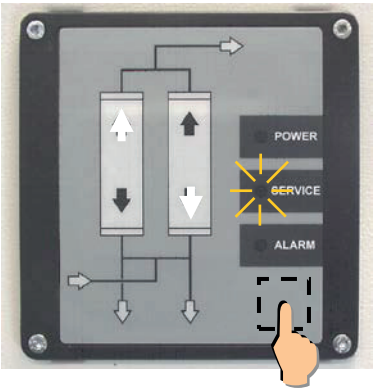

Press key for **3s**, the service LED shines permanent and is terminated after 3s.
Hint: in the service mode the operating condition will **not** be indicated via the adsorber LED´s

Service messages in service mode:

Service A (activated)

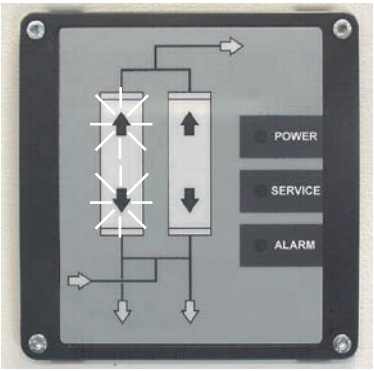

Service B (activated)

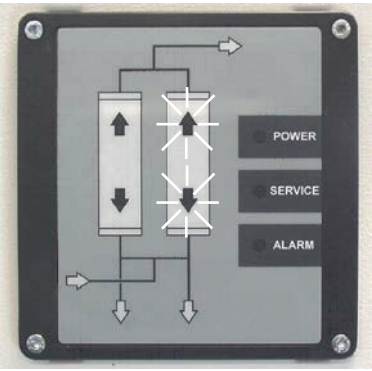

Service C (activated)

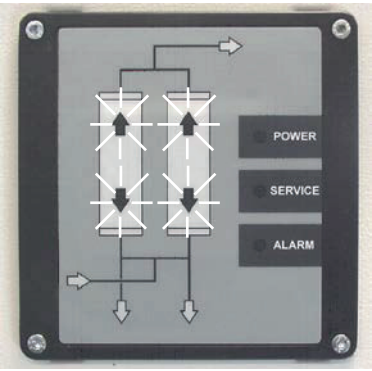

10.2.2 Reset of the Service Messages (Standard-Version)

Example:
Service A (activated)

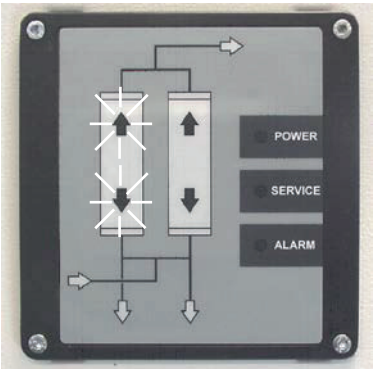

Reset

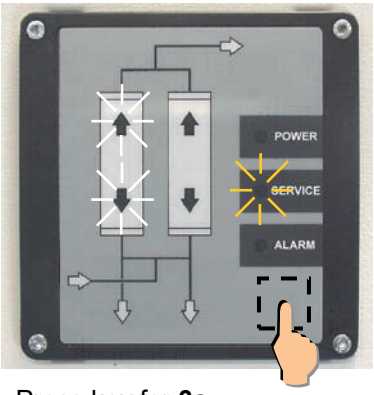

Press key for **3s**,
the service LED flashes 3x after releasing the key

Left adsorber LED´s are terminated

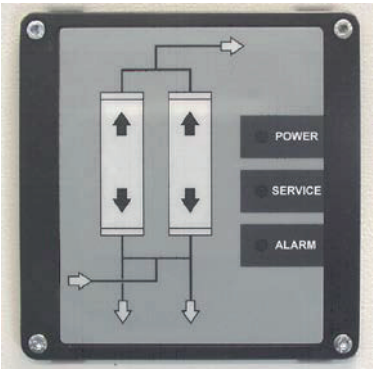

No further key actuation

The service mode will be left automatically after 5s

Scrolling in the service messages

Service B
(not activated)

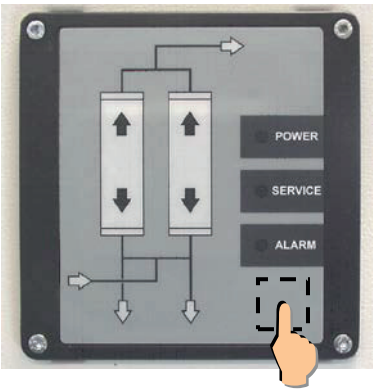

Service B will be indicated, LED´s shine permanent, because Service B is still not activated (time for necessary service is not reached.

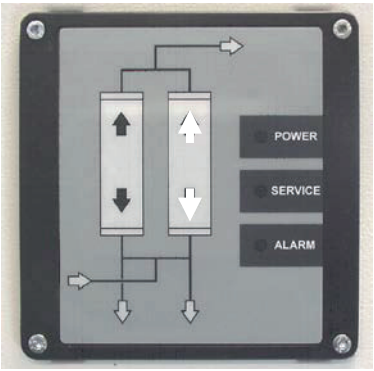

Press key **1x**

Service C
(not activated)

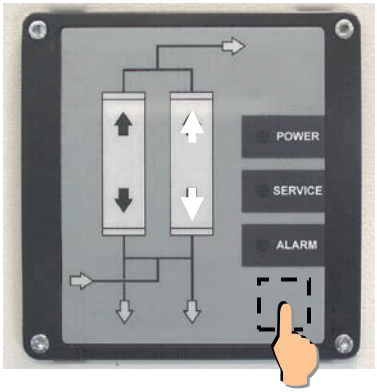

Press key **1x**

Service C will be indicated, LED´s shine permanent because service C is still not activated (time for necessary service is not reached

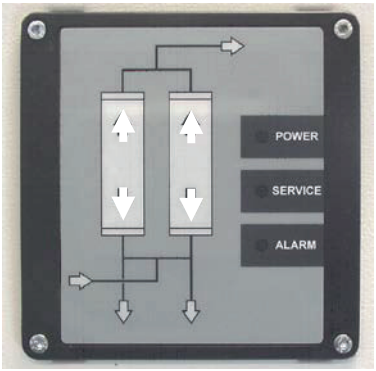

A service message, which is not activated, also can be resetted *

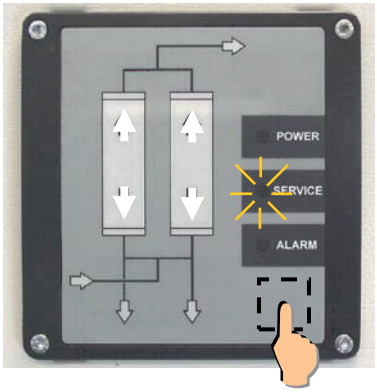

Press key for **3s**, the service LED flashes 3x

The adsorber LED´s are terminated. Renewed indication is possible shortly after 1h.

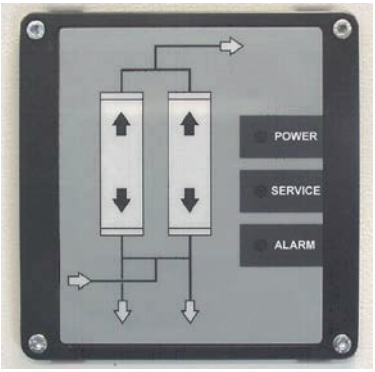

Scroll (by pressing the key short 1x) to the next service message **
or wait 5s until the service mode is left automatically

* **The aim of this function:**
Possibly together with service A also a service B or C is accomplished, although this would be not yet necessary. Then also the appropriate not yet active service messages must be resetted, in order to reposition the operating hours to "0".

** **Hint:**
With first startup as well as after acknowledgement or resetting an active/ not active service in the service mode the adsorber LED's shine again permanently after 1h, which means, renewed acknowledging is possible only by leaving the service mode and renewed calling.

Hint:
Due to possible overlaps of the ends of the time intervals between service "A", "B" and "C" it can be, that, e.g. resetting of service "A" leads automatically also to resetting the service "B" or something else.

10.3 The Text Display (Dewpoint Control)

After start-up and pressurization of the unit, the current operating conditions appear as text on the display.

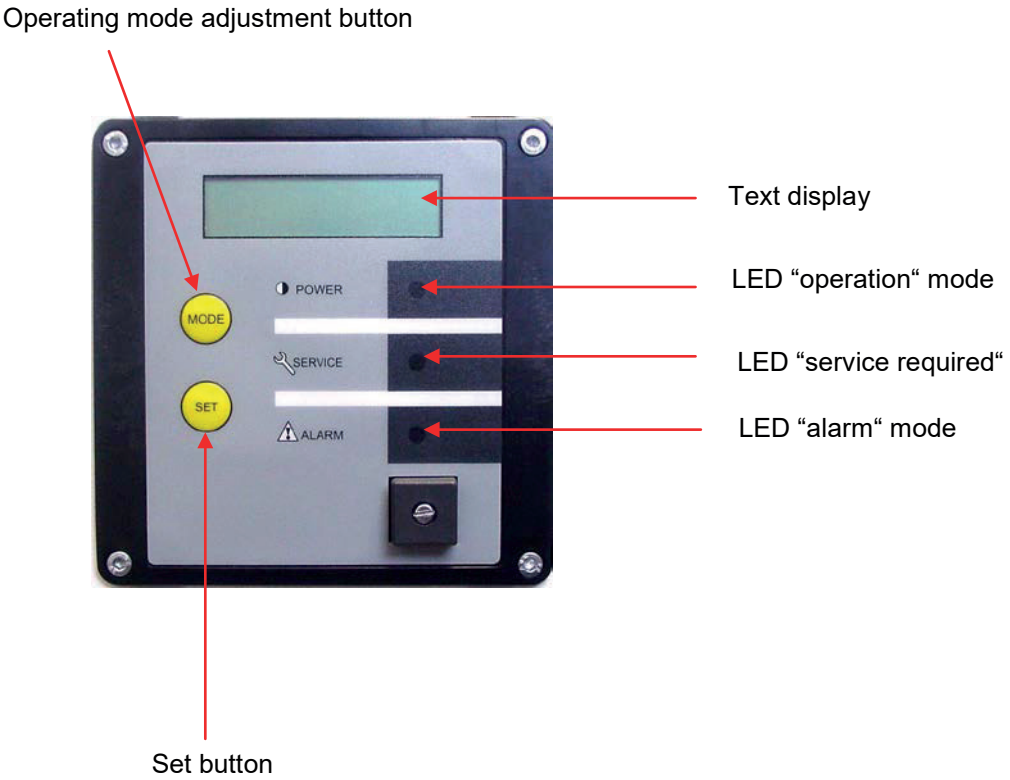

10.3.1 Function of the Buttons

The "mode" - button scrolls down the main menu in a loop. After the last content is displayed, the first content is shown again.

By pressing the mode button and set button simultaneously for at least 3 seconds, the service level is activated, which accesses service messages, language selection, and other parameter settings.

Changing the Language Setting:

- Simultaneously press the "mode-button" and the "set - button" for at least 3 seconds.
- “Service mode 1.0” (revision level) appears in the display.
- Continue to press the mode-button until "country" appears in the display.
- Press the "set-button” for a minimum of 3 seconds.
- “Great Britain” text will blink on the display.
- By pressing the mode button, the country can be changed.
- Press the set-button for a minimum of 3 seconds to store the setting.
- If the button is not pressed within 10 seconds, a time-out will occur without storing the data.
- The selected country is shown on the display.

To exit the "second level"("service-level"), simultaneously press the "mode"-button and "set"-button for a minimum of 3 seconds.

The service-level automatically exits if no changes take place within 5 minutes (no button activity).

10.3.2 Display Contents

Current status of the settings and alarm or service messages are shown in the display.
Table 1 shows the different text messages. The menu consists of 2 levels:

- "First Level:" Display shows current operating conditions. Content can be scrolled down by pressing the mode button.
- "Second Level" (service level): Display is accessed by pressing the mode-button and the set-button simultaneously for a minimum of 3 seconds. Content can be scrolled down by pressing the mode button. Changes can be made as described in chapter 10.3.1.

Important: When restarting the unit (or after a power failure), the unit will always start re-pressurization.

Table 1: First level (without set-button)

Display Contents				
	Upper line	**Lower line at dewpoint control**	**Lower line at time control**	**Remark**
Current operation	Dewp. Control ↑ (↓)	Dewpoint= xx °C	----------	Automatically as main display (after 10 min.)
	Adsorption Right	Dewpoint= xx °C	xx:xx/Rest xx:xx	Alternating right/left
	Adsorption Left	Dewpoint= xx °C	xx:xx/Rest xx:xx	Alternating right/left
	Regen. Right	xx:xx/Rest xx:xx	xx:xx/Rest xx:xx	Alternating right/left
	Regen. Left	xx:xx/Rest xx:xx	xx:xx/Rest xx:xx	Alternating right/left
Statistic	Operating time	xxxxxx hrs.	xxxxxx hrs.	
	Stand-By	xxx:xx:xx hrs.	xxx:xx:xx hrs.	
	Oper. Time Ads.	xxxxxx hrs.	xxxxxx hrs.	Operation time of the desiccant
	Oper. Time Pur.	xxxxxx hrs.	xxxxxx hrs.	Operation time of the purifier stage at ALG or OFP dryers
(from 06.2015)	Cycles total	xxxxxx	xxxxxx	6-digit number of cycles
(from 06.2015)	Cycles Ads.	xxxxxx	xxxxxx	6-digit number of cycles (will be resetted to "0" at service C).
Action	Off-Line			Dryer runs in „off-line". Display only if this function is caused (intermittent operation).

	Upper line	Lower line at dewpoint control	Lower line at time control	Remark
Service messages	Service A	replace !	replace !	Maximum life of consumable parts reached (indicated alternately at main display).
	Service B	replace !	replace !	Maximum life of purifier stage reached for ALG and OFP dryers (indicated alternately at main display).
	Service C	replace !	replace !	Maximum life of desiccant reached (indicated alternately at main display).
	Transmitter	calibrate !		Annual calibration of dewpoint transmitter required.
Alarm messages	Safety Mode			Safety operation (fix-operation) Displayed if alarm is triggered.
	Dewpoint Alarm			Dewpoint alarm is triggered (failure).
	Short	Transmitter		Short of dewpoint-transmitter (failure).
	Open	Transmitter		Open wire on transmitter (failure).
	Failure			Electrical malfunction.
	Alarm	Drain		Drain signal alarm is triggered.
	Caution !!	Safety Shut Off		Differential pressure at OFP triggers an alarm (display flashes).

Table 2: Second Level (with set button)

Display contents				
	Upper line	**Lower line at dewpoint control**	**Lower line at time control**	**Remark**
Service Mode				Press the set-button (change happens if set-button is pressed >3s).
	Service Mode x.x			Number represents software version.
	Country	Great Britain		Country-Selection DE/**GB**/NL/FR/IT/ES/PT/PL/DK/FI/ SE/NO/TR/CZ.
	Pressure	xx bar		1-16 bar adjustable.
	Temperature	xx °C		25-55°C in 5° degree adjustable increments.
	Switchover Dewp.	-48 °C		Switch over temperature Adjustable from 0 to -100°C (Preset –48°C).
	Dewpoint alarm	0 °C		Adjustable from +20 to -80°C or switch „Off“ Preset 0°C.
	Mode	Dewp. Control Dewpoint in Safe	Time Control	Selection dewpoint control or time control. Only at dewpoint alarm.
	Service A	Change ?	Change ?	Acknowledgement Service A (will be confirmed with “Change successful !“).
	Service A	done ?	done ?	
	Service B	Change ?	Change ?	Acknowledgement Service B Only at ALG and OFP driers (will be confirmed with “Change successful !“).
	Service B	done ?	done ?	
	Service C	Change ?	Change ?	Acknowledgement Service C (will be confirmed with “Change successful !“).
	Service C	done ?	done ?	

10.3.3 Service Intervals

Service A (annual maintenance interval)
HED/ALD/MSD, OFP, ALG : Indication after 52500 cycles or 8760 hrs.

Service B (annual maintenance interval)
OFP, ALG : Indication after 52500 cycles or 8760 hrs.

Service C (triennial maintenance interval)
HED/ALD/MSD, OFP, ALG : Indication after 157500 cycles or 28000 hrs.

10.3.4 Graphic Representation of the Service

To explain the service A to C more clearly, should be represented their formation and its contexts in a chart.

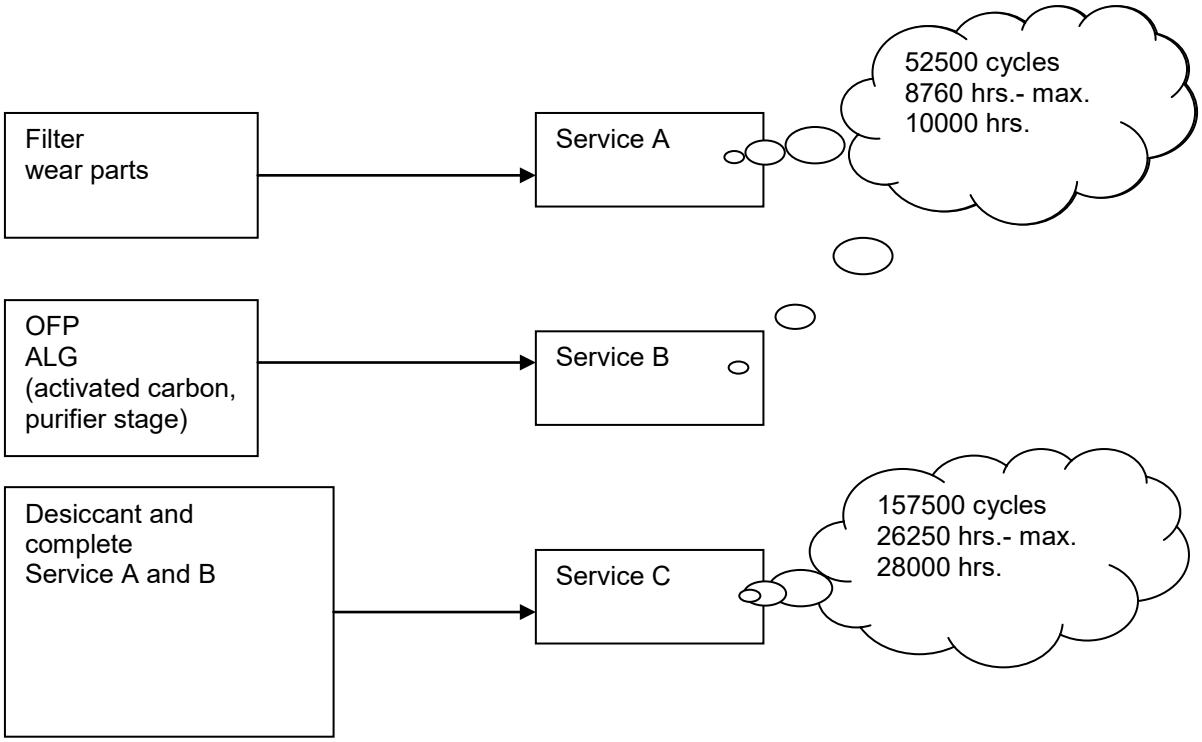

11 Malfunctions

In this chapter we will explain to you:

- which faults can occur
- the causes of problems
- which measures must be taken to correct problems. You can get an overview of this topic in the corresponding overview list (see chapter 11.2).

List all fault messages, operating states and parameters settings at the time of the malfunction

In some troubleshooting instances, it is neccessary to power down the unit. In such a case, please follow the below steps.

- Shut-down the unit.
  Carry on the shut-down procedure described in chapter 7.2).
  Put up a warning notice forbidding the start-up of the unit!

- Depressurize the unit as needed (see chapter 7.3).

- Restore the unit back to its original state after service.

Important: Corrective action may only be taken by assigned and trained personnel!

11.1 Possible Causes of Faults

Before identifying the cause of the malfunction, ensure the following areas are checked and in proper condition:

- Is there external unit damage or missing parts?
- Any power to the unit? Does the power being used correspond to the type listed on the type plate?
- Is the power supplied to all electrical components and modules within the unit?
- Are pneumatically-operated components supplied with the compressed air for control purposes? Does compressed air for control purposes meet the minimum pressure stated on the type plate?
- Was the start-up process carried out properly (see chapter 7.1 „Initial Startup“)?
- Are all external shut-off valves in their correct positions (see chapter 7.1 „Initial Start-up“)?
- Do the input parameters (max. throughput, min. operating pressure, max. inlet temperature) correspond to the data used for the design calculation ?

11.2 Troubleshooting

Troubleshooting tables for HED-ALD-MSD, ALG and OFP are provided on the following pages.

11.2.1 Troubleshooting HED/ALD/MSD		
Symptom	**Possible cause**	**Solution**
Controller is inoperable: LEDs on display do not light up Alarm at the alarm output (connector block X8) is activated (if installed)	No power supply	Make sure, that the power supply, which is mentioned on the type plate, is available
	Fuse **F1 is** defective (see page 32)	Cut off the power supply to the controller. Check controller and replace fuse if necessary
	Controller defective	Check controller and replace it if necessary
LED “Alarm” lights up Alarm at the alarm output (connector block X8) is activated (if installed)	Condensate drain defective	Please consider the separate operation manual for the condensate drain
High differential pressure at HED/ALD/MSD	Filter elements are dirty	Check differential pressure at filter casing (econometer), replace filter elements if necessary
	Gas distributors in the vessels are blocked	**Contact after-sales service**
Shuttle valves **(9)** do not switch over (see P&I-diagrams on page 36)	Solenoid valve **(5)** has not opened	Check solenoid valve and replace if necessary **Shut down the unit (see chapter 7.2) and depressurize it (see chapter 7.3)**
	Shuttle valve **(9)** is defective	Check shuttle valve, replace any defective parts if necessary **Shut down the unit (see chapter 7.2) and depressurize it (see chapter 7.3)**
	Controller defective	Check controller and replace it if necessary

Troubleshooting HED/ALD/MSD		
Symptom	**Possible cause**	**Solution**
Pressure gauge banks pressure during regeneration	Silencer is blocked	Dismantle and clean silencer, and replace if necessary **Shut down the unit (see chapter 7.2) and depressurize it (see chapter 7.3)**
	Gas distributor in adsorber is blocked	**Contact after-sales service**
LED at condensate drain flashes		Please consider the separate operation manual for the condensate drain
Pressure gauge shows excessively low pressure during adsorption and the unit ventilates during the pressure build-up phase	Solenoid valve **(5)** is leaking or has not closed	Check solenoid valve and replace if necessary
	Shuttle valve **(9)** is leaking or has not switched over	Check shuttle valve and replace any defective parts if necessary **Shut down the unit (see chapter 7.2) and depressurise it (see chapter 7.3)**
Dewpoint is too high	Input conditions are not being maintained	Check the throughput, pressure and temperature of the medium, and reset the values if necessary
	Amount of gas for regeneration is inadequate	Check solenoid valve for pressurizing Check regeneration air nozzle Check sleeve gate for pressurizing
	Condensate is inside the dryer	Check prefilter and condensate discharge line, replace filter element or condensate discharge line if necessary **Shut down the unit (see chapter 7.2) and depressurize it (see chapter 7.3)**

11.2.2 Troubleshooting ALG		
Symptom	**Possible cause**	**Solution**
Controller is inoperable: LEDs on display do not light up Alarm at the alarm output (connector block X8) is activated (if installed)	No power supply	Verify that the power supply stated on the type plate is available
	Fuse **F1** is defective (see Fig. on page 32)	Cut off the power supply to the controller. Check controller, replace fuse if necessary
	Controller defective	Check controller, and replace it if necessary
LED “Alarm” lights up Alarm at the alarm output (connector block X8) is activated (if installed)	Condensate drain defective	Please consider the separate operation manual for the condensate drain
High differential pressure at ALG	Filter elements are dirty	Check differential pressure at filter housing (Econometer), replace filter elements if necessary
	Gas distributors in the vessels are blocked	**Contact after-sales service**
Pressure gauge banks pressure during regeneration	Silencer is blocked	Dismantle and clean silencer, and replace if necessary **Shut down the unit (see chapter 7.2) and depressurise it (see chapter 7.3)**
	Gas distributor in adsorber is blocked	**Lower gas distributor:** Drain the desiccant, dismantle and check gas distributor and clean if necessary **Upper gas distributor:** Dismantle and check gas distributor, clean if necessary

Troubleshooting ALG		
Symptom	**Possible cause**	**Solution**
LED at condensate drain flashes		Please consider the separate operation manual for the condensate drain
Shuttle valves **(9)** do not switch over (see P&I-Fliessbilder on page 38)	Solenoid valve (10) has not opened	Check solenoid valve and replace if necessary **Shut down the unit (see chapter 7.2) and depressurize it (see chapter 7.3)**
	Shuttle valve (9) is defective	Check shuttle valve and replace any defective parts if necessary **Shut down the unit (see chapter 7.2) and depressurize it (see chapter 7.3)**
	Controller is defective	Check controller and replace it if necessary
Dewpoint is too high	Input conditions are not being maintained	Check the throughput, pressure and temperature of the medium, and reset the values if necessary
	Amount of gas for regeneration is inadequate	**Contact after-sales service**
	Condensate is inside the dryer	Check prefilter and condensate discharge line and replace filter element or condensate discharge line if necessary **Shut down the unit (see chapter 7.2) and depressurize it (see chapter 7.3)**

11.2.3 Troubleshooting OFP		
Symptom	**Possible cause**	**Solution**
Controller is inoperate: LEDs on display do not light up Alarm at the alarm output (connector block X8) is activated (if installed)	No power supply	Verify that the power supply stated on the type plate is available
	Fuse **F1** is defective (see page 32)	Cut off the power supply to the controller. Check controller and replace fuse if necessary
	Controller is defective	Check controller, and replace if necessary
LED “Alarm” lights up Alarm at the alarm output (connector block X8) is activated (if installed)	Condensate drain defective	Please consider the separate operation manual for the condensate drain
High differential pressure at OFP	Filter elements are dirty	Check differential pressure at filter casing (econometer), replace filter elements if necessary
	Gas distributors in the vessels are blocked	**Contact after-sales service**
No oil flow through OFP	Oil leakage safety device activated	Check unit for oil leakage (red signal lamp in reset key is on). Replace filter elements, desiccant and activated carbon
Shuttle valves **(8)** do not switch over (see P&I-diagrams on page 40)	Solenoid valve **(10)** has not opened	Check solenoid valve and replace if necessary. **Shut down the unit (see chapter 7.2) and depressurise it (see chapter 7.3)**
	Shuttle valve **(8)** is defective	Check shuttle valve and replace any defective parts if necessary **Shut down the unit (see chapter 7.2) and depressurise it (see chapter 7.3)**
	Controller defective	Check controller, and replace if necessary

Troubleshooting OFP		
Symptom	**Possible cause**	**Solution**
Pressure gauge banks pressure during regeneration	Silencer is blocked	Dismantle and clean silencer and replace if necessary. **Shut down the unit (see chapter 7.2) and depressurize it (see chapter 7.3)**
	Gas distributor in adsorber is blocked	**Lower gas distributor:** Drain the desiccant, dismantle and check flow distributor and clean if necessary. **Upper gas distributor:** Dismantle and check gas distributor and clean if necessary
	Shuttle valve **(8)** is leaking or has not switched over	Check shuttle valve and replace any defective parts. **Shut down the unit (see chapter 7.2) and depressurize it (see chapter 7.3)**
LED at condensate drain flashes		Please consider the separate operation manual for the condensate drain
Pressure gauge shows excessively low pressure during adsorption and the unit ventilates during the pressure build-up phase	Solenoid valve **(10)** is leaking or has not closed	Check solenoid valve, and replace if necessary
	Shuttle valve **(8)** is leaking or has not switched over	Check shuttle valve and replace any defective parts if necessary **Shut down the unit (see chapter 7.2) and depressurize it (see chapter 7.3)**

Troubleshooting OFP		
Symptom	**Possible cause**	**Remedy**
Dewpoint is too high	Input conditions are not being maintained	Check the throughput, pressure and temperature of the medium, and reset the values if necessary
	Amount of gas for regeneration is too little	**Contact after-sales service**
	Condensate is inside the dryer	Check prefilter and condensate discharge line, replace filter element or condensate discharge line as necessary. **Shut down the unit (see chapter 7.2) and depressurize it (see chapter 7.3)**

12 Maintenance and Servicing

12.1 Maintenance Intervalls

Filter elements

In order to ensure proper unit operation, the filter elements should be changed when prompted by the message on the display or after a maximum of 8760 operating hours or 1 year.

Desiccant

Oil in a liquid form can destroy the desiccant and restrict unit functioning. It is therefore necessary to ensure that the filter elements are replaced regularly.

Failure to ignore improper operating conditions (high inlet temperature or low operating pressure) can lead to desiccant overload causing unit malfunction.
In order to ensure proper unit operation, the desiccant should be changed when prompted by the message on the display or after a maximum of 26250 operating hours or 3 years.

CO_2-adsorber (ALG)

The CO_2 adsorber must be replaced after approx. 8760 hours of continuous operating time or after 1 year. This is calculated for a CO_2 inlet concentration of 750 ppm.
Variations in the inlet concentration will result in either a shorter or longer service life.

Activated carbon adsorber (ALG / OFP)

Activated charcoal must be refilled after approximately one year (10.000 operating hours) or as soon as an odour is detected in the air.

Catalyst (ALG)

The catalyst is part of the activated carbon filling and should be changed with the activated carbon filling.

Breathing air tests are recommended at regular intervals!

Service-Inspection Checklist: HED-ALD-MSD/ ALG/ OFP

1) Visually check the adsorption dryers and filters
2) Checking of the pre-and afterfilter elements and the exchange of the filter elements
3) Test and clean the condensate drains
4) Check all valves, clean and lubricate as needed
5) Check the silencer and exchange as needed
6) Check all electrical components and indicator lamps
7) Check adsorbent and exchange according to service schedule
8) Test leakage under pressure
9) Test.and run adjacent controller
10) Check the switch over of the adsorption dryer
11) Start the dryer
12) Check compressed air quality
13) Record data and inspection information in a service report

The manufacturer recommends the following maintenance schedule within the stated intervals.

MAINTENANCE INTERVALS							
Product	Type Remark	3 months	6 months	12 months	24 months	3 years	5 years
HED-ALD-MSD/ OFP ALG	**0050 – 1000 80 S – 375 S**						
Service inspection	**Check/ clean:** Condensate drain at prefilter Silencer Shuttle valves Solenoid valve **Check:** Adsorber, desiccant			X			
Service Kit A				X			
Recalibration dewpoint transmitter	Dewpoint Control			X			
Carepac (Service C)						X	
OX-Filling (ALG)*				X			
AK-Filling (ALG+OFP)*				X			

* The manufacturer is recommending to change each year the OX, AK, spare filling together with the Service-Kit A according to application.

12.2 Service-Sets

12.2.1 Service-Sets HED / ALD / MSD

Article numbers of Service-Sets HED / ALD / MSD 0050-1000			
Type	**Service-Kit A HED / ALD / MSD**	**Carepac C HED / ALD**	**Carepac C MSD**
0050	942605	942622	942639
0080	942606	942623	942640
0100	942607	942624	942641
0150	942608	942625	942642
0175	942609	942626	942643
0225	942610	942627	942644
0300	942611	942628	942645
0375	942612	942629	942646
0550	942613	942630	942647
0650	942614	942631	942648
0850	942615	942632	942649
1000	942616	942633	942650

Content of Service-Sets HED / ALD / MSD 0050-1000		
Type	**Service-Kit A**	**Carepac C**
0050 - 1000	Filter elements O-Rings Set of wear parts solenoid valves Set of wear parts condensate drain Silencers Wear parts for shuttle valves	Filter elements O-Rings Set of wear parts solenoid valves Set of wear parts condensate drain Silencers Wear parts for shuttle valves Desiccant filling Gas distributors Set of seals

12.2.2 Service-Sets ALG

Article number Service-Sets ALG 80 S – 375 S			
Type	**Service-Kit A** **ALG**	**Carepac C** **ALG**	**Desiccant filling** **AK / OX**
80 S	942686	942693	942700
100 S	942687	942694	942701
150 S	942688	942695	942702
225 S	942689	942696	942703
300 S	942690	942697	942704
375 S	942691	942698	942705

Content of Service-Sets ALG 80 S – 375 S		
Type	**Service-Kit A**	**Carepac C**
80 S - 375 S	Filter elements O-Rings Sets of wear parts solenoid valves Sets of wear parts condensate drains Silencers Sets of wear parts shuttle valve	Filter elements O-Rings Sets of wear parts solenoid valves Sets of wear parts condensate drains Silencers Sets of wear parts shuttle valves Desiccant filling Gas distributor AK-filling OX-filling Set of seals

* **Manufacturer's recommendation**: annual replacement of the replacement filling of OX and AK together with service-kit A depending on the application.

12.2.3 Service-Sets OFP

Article number Service-Sets OFP 0050-1000			
Type	**Service-Kit A** **OFP**	**Carepac C** **OFP**	**Desiccant filling** **AK**
0050	942656	942673	985056
0080	942657	942674	985064
0100	942658	942675	985072
0150	942659	942676	985080
0175	942660	942677	985084
0225	942661	942678	985088
0300	942662	942679	985096
0375	942663	942680	985104
0550	942664	942681	985112
0650	942665	942682	985120
0850	942666	942683	985128
1000	942667	942684	985136

Content of Service-Kits OFP 0050 - 1000		
Type	**Service-Kit A**	**Carepac C**
0050 - 1000	Filter elements O-Rings Sets of wear parts solenoid valves Sets of wear parts condensate drains Silencers Sets of wear parts shuttle valves	Filter elements O-Rings Sets of wear parts solenoid valves Sets of wear parts condensate drains Silencers Sets of wear parts shuttle valves Sets of wear parts butterfly valve Wear parts actuator for butterfly valve Desiccant filling Gas distributor Activated carbon filling* Set of seals

* **Manufacturer's recommendation** The manufacturer is recommending to change each year AK spare filling together with the Service-Kit A according to application.

12.3 Maintenance Filter

Check loss of pressure

Interval: monthly

Check for filter pressure loss at the Econometers (differential pressure indicator) during unit operation.

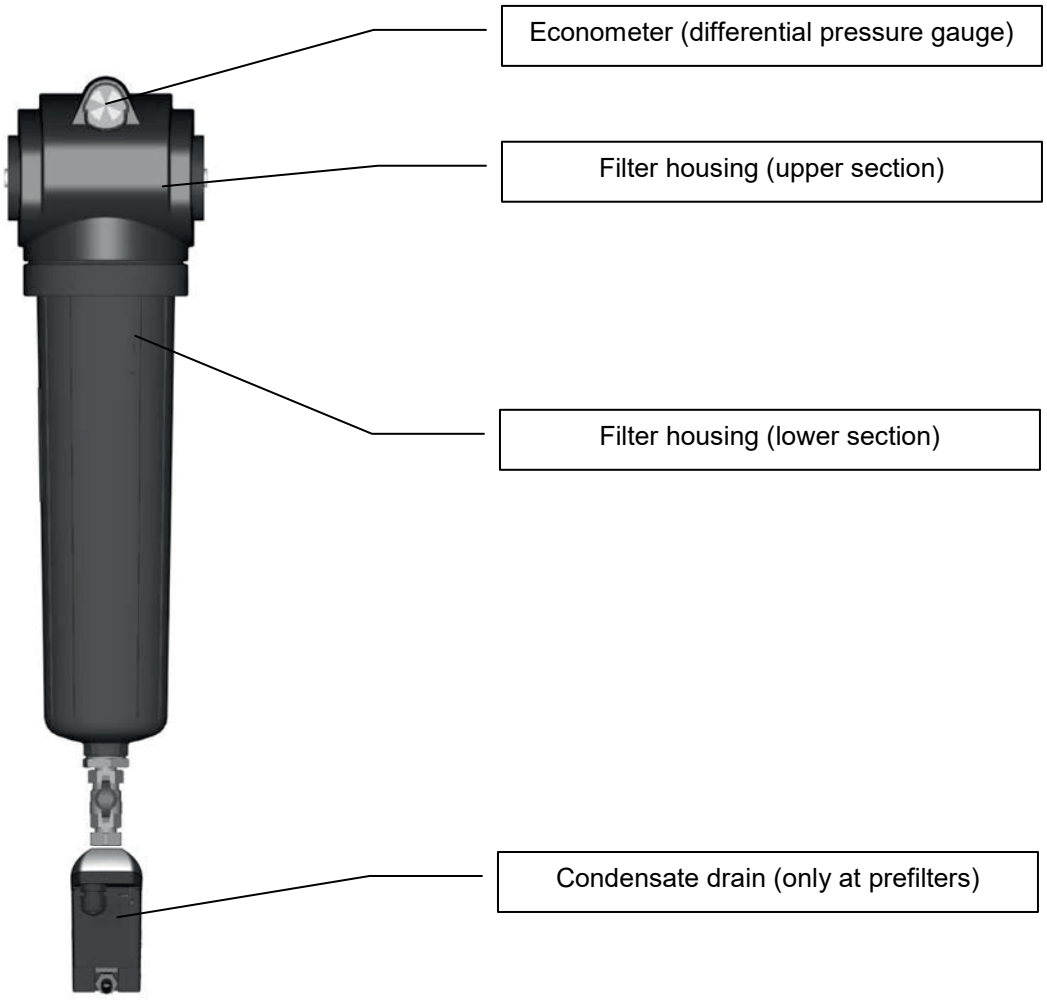

Prefilter with condensate drain

Replacing filter elements

Interval: every 8760 hours

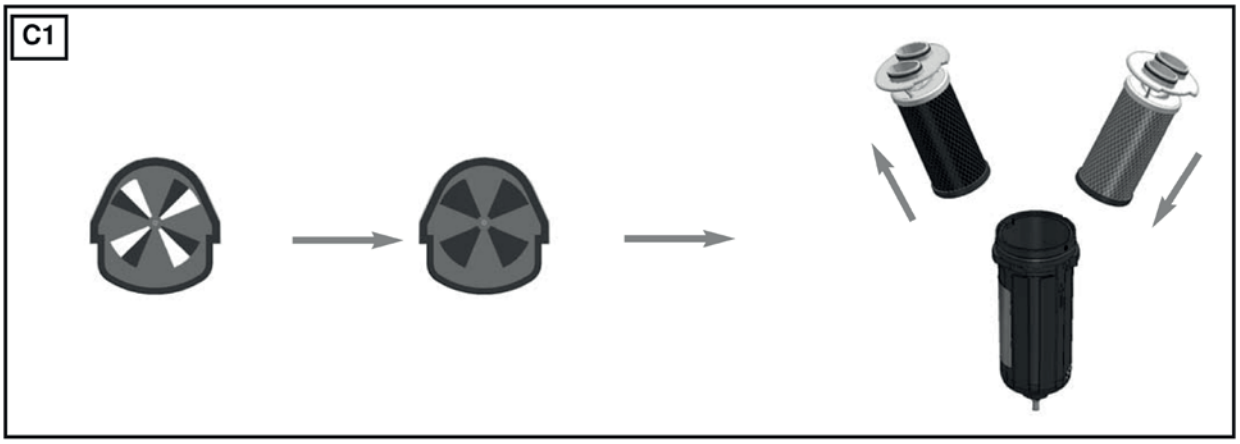

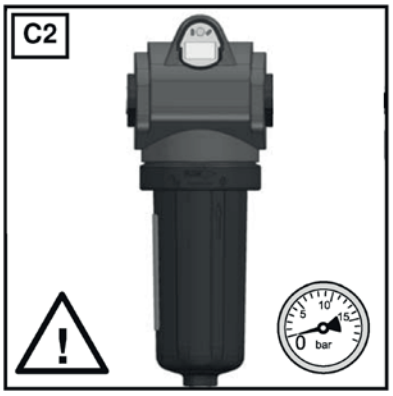

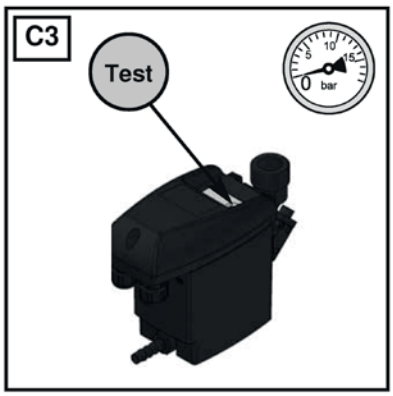

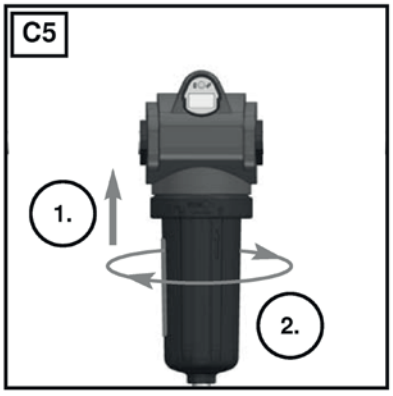

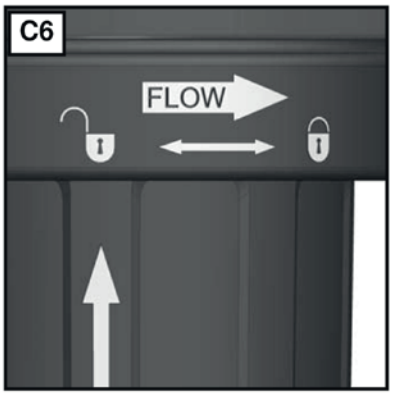

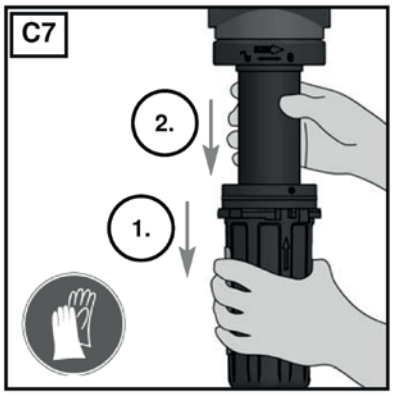

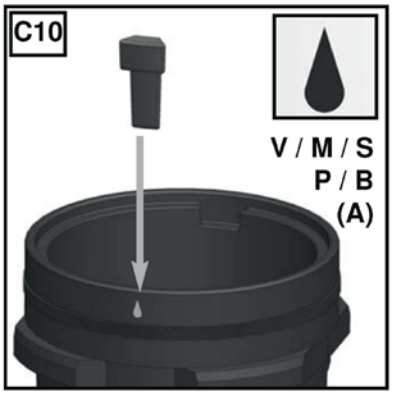

Pictures C10 + C11: Afterfilter
Pictures C12 + C13: Prefilter

These steps are only necessary, if the manufacturer-installed clip is damaged or lost.

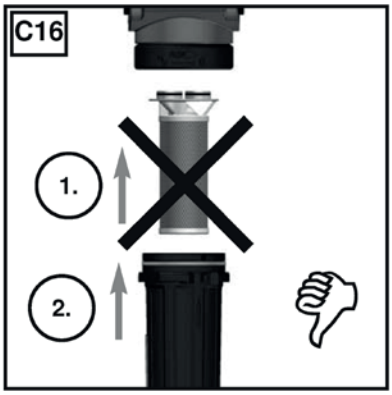

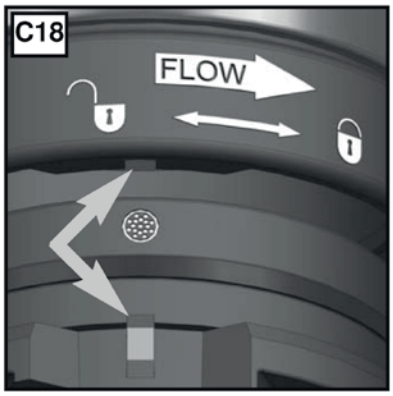

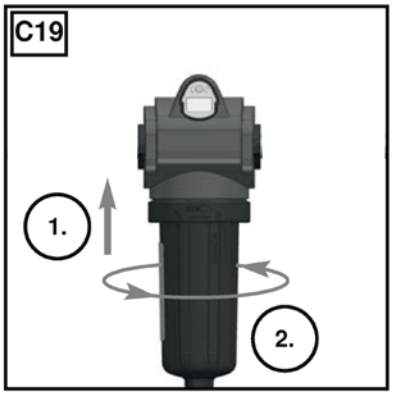

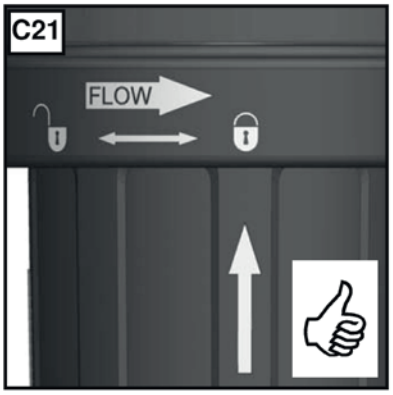

12.4 Maintenance Condensate Drain

See operation manual “condensate drain” in appendix 14.7 ”Manufacurer and Acessory Documentation“.

12.5 Maintenance – 2/2-Way Solenoid Valve

Preventive maintenance and cleaning of the 2/2 Way Solenoid Valve are recommended in accordance with operating-conditions and with noticeable change of the switch-times or switch-sounds. According to environment conditions, the solenoid and the electric connection on the solid seat and certain insulation should be checked at regular intervals for rips and contamination.

The operator is responsible for scheduling preventive maintenance based on the operating condition of the valve. Service may be enforced only from trained personnel and with suitable tools.
Spare parts are available in the form of service kits. The order-numbers are to be found in the parts lists in the appendix.

Sediments, filth, aged or worn-out parts can lead to malfunctions.

Service may be carried out only with depressurized piping-system and disconnected solenoids. Dismantling the valve from the pipeline is not necessary.

Mounting

Inspect solenoid valve for signs of external damage. Clean pipework before mounting valve. Remove dust caps from the connections before mounting it in the pipe system. Use recommended PTFE tape to seal the G connection thread. Avoid distorting the body of the valve in misaligned pipework or by using inappropriate tools or sealing material.

Do not use the solenoid as a lever!

The valve may be mounted in any position. However, there is less risk of wear and dirt contamination of the solenoid if it is positioned upright.

Electrical Connection

Connect solenoid in accordance with electrical regulations. Then close the terminal compartment carefully to restore protection. Make sure the cable entry is sealed properly and the seal between solenoid and power lead socket is properly seated. IP65 protection is achieved if the procedure is performed properly. Tighten the central screw of the power lead socket to a maximum torque of 60 Ncm.

The housing must not show signs of distortion.
Ensure correct polarity of terminals marked + and -.
Unmarked supply wires can be connected either way around.

Caution! It is vital to connect the ground wire to the appropriately marked terminal provided!
It is advisible to carry out an operating test before pressurizing. The clicking (impact) of the plunger must be heard during switching. Ensure the power is switched off before connecting the valve!
Operating AC solenoids without the plunger and plunger tube will cause them to burn out!

NC Function

Normally closed:
The compression spring in the plunger closes the pilot seat. A closing spring forces the diaphragm onto the main seat of the valve. The process fluid flows through the bleed orifice in the diaphragm into the actuator compartment above and increases the closing force.

Open position:
When the power is switched on, the magnetic force pulls the plunger against the pole face of the tube. Though the now open pilot seat, the pressure in the actuator compartment is released through the valve outlet.

As more fluid flows out of the actuator compartment through the pilot seat, additional fluid is replenished from the bleed orifice in the diaphragm. As a result, the differential pressure lifts the diaphragm and the main seat of the valve is opened.

Troubleshooting

No working: The control voltage measured immediately before the solenoid must be > 90% of its nominal value. If it is lower than this value or a long cable is used, a heavier conductor must be chosen to keep the voltage drop minimal.

Fuse loose or blown:	Check fuse.
Solenoid faulty, no continuity:	Replace solenoid
Operating pressure excessive:	Check and reduce maximum
Diaphragm cracked:	Replace diaphragm
Valve dirty:	Clean control passages
Plunger jammed:	Clean plunger and its tube

Valve seat leaking: Clean valve and replace diaphragm if seat very dirty.

Replacing solenoid
Switch off power supply. Unscrew central screw of power lead socket and remove socket.
Release Click-on® spring clip and pull solenoid off. Replace O-ring on plunger tube if hard.
Slip the new solenoid onto the tube so that the spring clip slides in the slot. Press clip until it engages for firmly into the seating. Turn solenoid to required position and fit the power lead socket with seal.
Tighten central screw of the power-led socket to a maximum of 60 Ncm.

Replacing diaphragm
Depressurize valve and switch off the power supply.
Disengage Click-on® spring clip and pull solenoid off.
Unscew valve cover screws and remove cover. Remove compression spring and diaphragm.
Mount new diaphragm on valve body as shown in diagram. Replace valve cover and tighten its screws diagonally.

Screw tightening torque:

M4	= 2,0 Nm±10%
M5	= 3,6 Nm±10%
M6	= 6,0 Nm±10%
M8	= 16,0 Nm±10%
M10	= 31,0 Nm±10%

Replacing plunger for NC function
Depressurise the valve and switch off the power supply. Disengage Click-on® spring clip and pull solenoid off. Replace O-ring on plunger tube if hard. Unscrew 22 mm screw piece. Remove plunger tube with screw piece and Click-on® clip. Remove O-ring from the groove. Replace compression spring and plunger. Push new O-ring into the collar of the plunger tube and fit tube as shown in the diagram. The O-ring is forced into the sealing position by screwing in the screw piece.
Tighten the screw piece to a torque of 20 Nm ±10%.

Replacing manual override
Depressurize valve and switch off power supply. Disengage Click-on® spring clip and pull the solenoid off. Replace O-ring on plunger tube if hard. Unscrew 22 mm screw piece. Remove plunger tube with screw piece and Click-on® clip. Remove O-ring from the groove.
Replace manual override. Push new O-ring into the collar of the plunger tube and fit tube as shown in the diagram. The collar of the plunger tube must engage in the groove of the manual override. The O-ring is forced into the sealing position by screwing in the screw piece. Tighten the screw piece to a torque of 20 Nm ±10%.

Fig. „Spare Parts“

„NC“ and „NO“ marked parts are available as “wear and tear-parts set” (see spare part list at appendix).

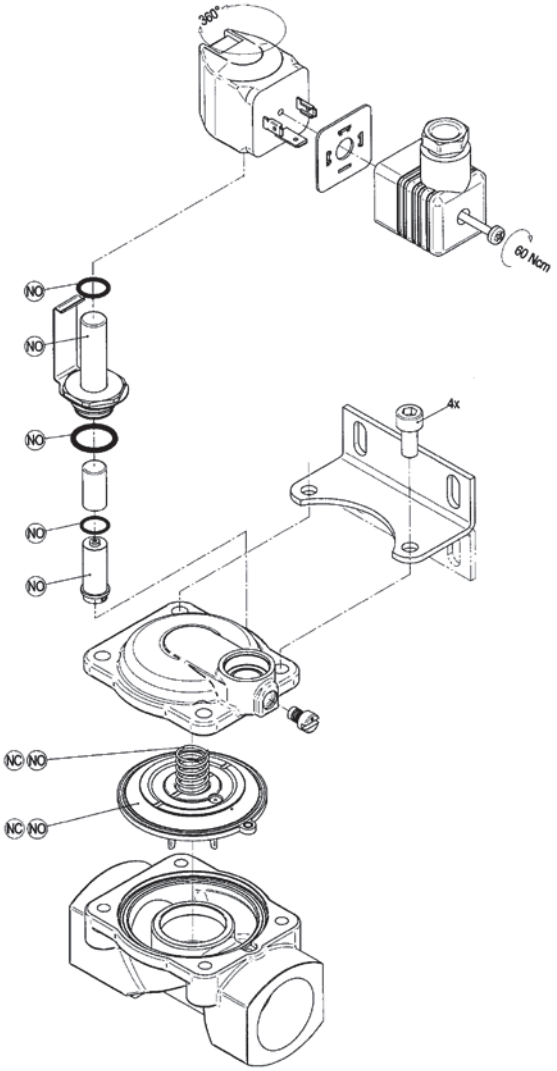

12.6 Maintenance – Shuttle Valves

Caution!

Maintenance work on the shuttle valves may only be performed by qualified and especially trained personnel.

1. Shutdown the unit.
2. Depressurize the unit.
3. Dismantle the entire upper section of the lower piping of the adsorption dryer from the tank or the piping. Unscrew the connecting nut on the threaded connections (1).

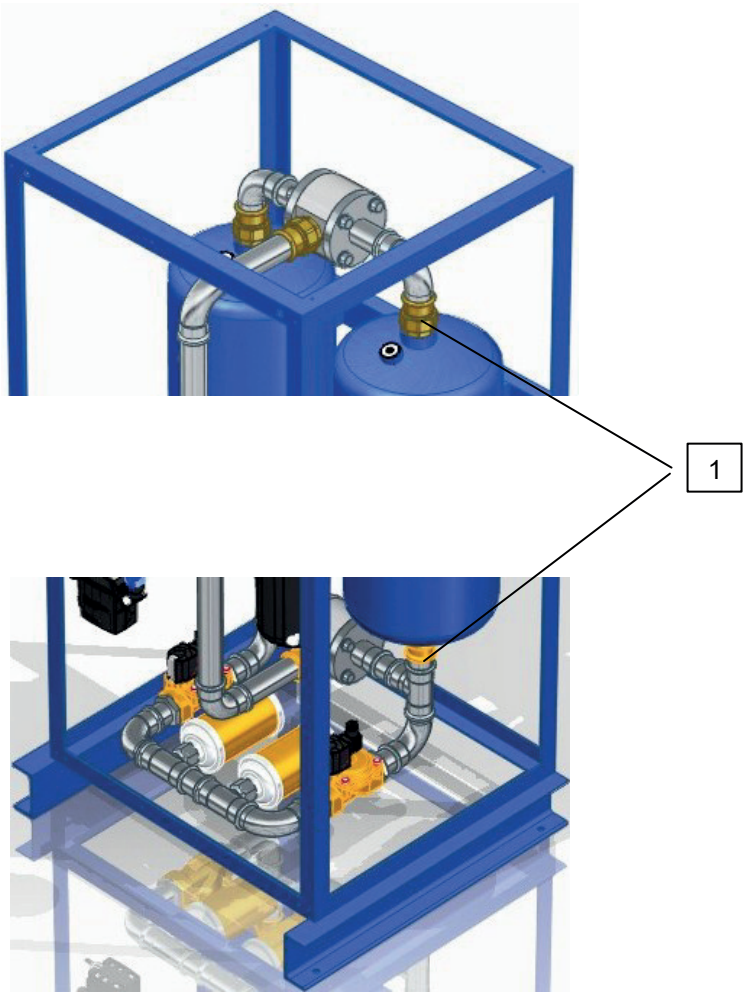

4. Dismantle the shuttle valve as follows:

- Remove the allen screws (6)
- Remove the shuttle valve housing (1)
- Remove the shims (4)
- Replace the valve cage (2) and valve body (3)
- Reassembly the parts in reverse order
- Ensure the correct seating of the valve cage (2) and shim (4)
- Use new flat gaskets (5) for sealing

Please note that the valve body for the upper shuttle valve has a bore. Otherwise, no regeneration and no pressure build-up takes place. The valve body for the lower shuttle valve must not have a hole.

Please note the following when tightening the allen screws
max. torque (M12:40Nm / M16: 95Nm)

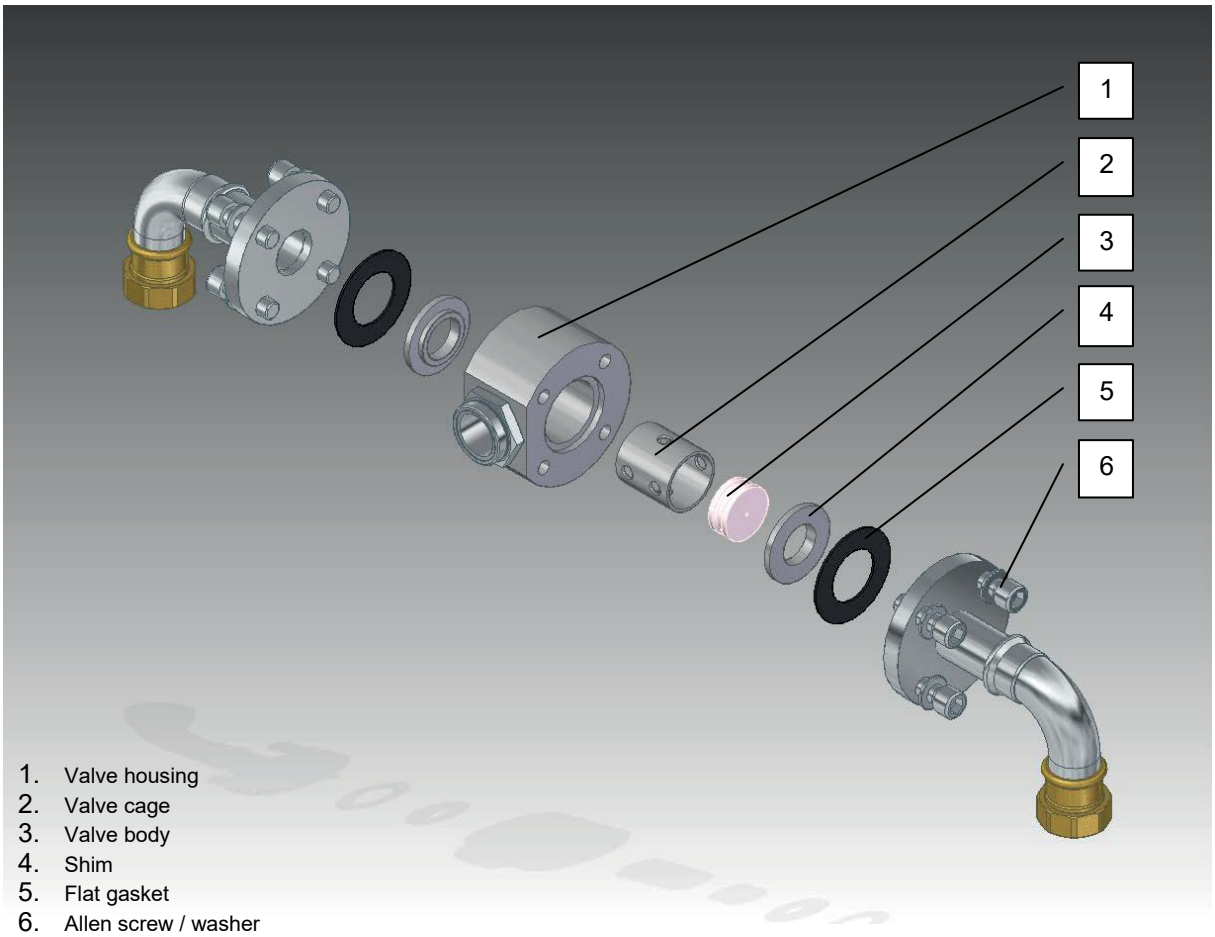

1. Valve housing
2. Valve cage
3. Valve body
4. Shim
5. Flat gasket
6. Allen screw / washer

5. Mount the complete upper and lower pipe back on the adsorption dryer .
Connect the three union nuts of the threaded connections on the tank or the pipe

6. Use new flat gasket for sealing glands.

7. Return the system under pressure.

8. Start the operation of the system again

12.7 Exchange of Desiccant / Adsorbents

Exchange of adsorbents

<u>Caution!</u> **Exchanging adsorbents may only be performed by qualified trained personnel.**

Interval: 26250 operating hrs or 3 years

Warning!
Risk of injury through eye contact!

- If the adsorbent gets into contact with the eyes, flush them with copious amounts clean water. Medical attention should be sough in all cases.

Warning!
Risk of injury if swallowed!

- Medical attention should be sought immediately.

When emptying and refilling the adsorber, use a dust-mask at all times (recommended dust protection-stage P2 respectively FFP2).

1. Shut down the unit.

2. Depressurize the unit.

3. Dismantle the complete upper section of the lower pipe of the adsorption dryer, respectively the 3rd vessel. Unscrew the ring nut on the screwed connections at the adsorber and the shuttle valve housings. At the activated carbon adsorber, only the ring nuts of the screwed connections at the vessel must be loosened.

4. Provide a sufficient number of vessels (plastic-sacks or pails) in order to catch the entire amount of adsorbent from the vessels.

5. Gas distributors are located between two flat seals at each end of the vessel to contain the adsorbent in the. Carefully pull out the lower gas distributor and catch the adsorbent in the container

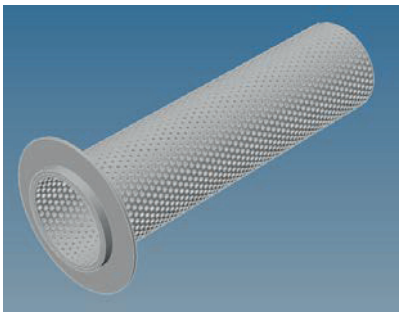

Tip: A vacuum cleaner may also be used to remove adsorbents from the adsorber.

6. After emptying the vessel, re-insert the gas distributor into the lower connection of the vessel. Ensure that the gas distributor is secured between the two flat-seals.

7. Install the lower pipe.

8. Remove the gas distributor from the upper connection of the vessel.

9. Refill the vessel with new adsorbent. While refilling, strike the vessel with a rubber hammer to compress the adsorbent.

10. Re-insert the gas distributor into the upper connection of the vessel. Ensure that the gas distributor is secured between the two flat-seals.

11. Install the upper pipe.

Pressurize the system and check all installed connections for leakage.

13 Options and Accessories

Available accessories:

- Switch-over monitoring
- Automatic start-up
- Bypass line
- Dewpoint measuring device UDM 300 with 2 alarm-contacts
- Auxiliary heating to protect against frost
- Pneumatic Control
- Programmer

Information on options and accessories for the dryer can be found in chapter 14.7.
Only use original spare parts and accessories from the manufacturer.
There is no guarantee that non-original parts have been designed and manufactured to meet the approppriate safety requirements.

14 Appendix

14.1 Technical Data

14.2 P & I – Diagram

14.3 Dimension Sheet

14.4 General arrangement

14.5 Instrument and Spare Parts List

14.6 Electrical Documentation

14.7 Manufacturer and Accessory Documentation

14

14.1 Technische Daten

14.1 Technical Data

14.1 Datos técnicos

14.1 Dados técnicos

14.1 Données techniques

14.1 Technische gegevens

14.1 Tekniske data

14.1 Dati tecnici

14.1 Tekniska data

14.1 Tekniske data

Technische Daten / Technical Data
Ultrapure ALG-S 0035 - 0375

1	2	3	4	5	6	7
	Volumenstrom Volume flow m^3/h	**Luftanschlüsse Air connections**	**Breite Width mm**	**Tiefe Depth mm**	**Höhe Height mm**	**Gewicht Weight kg**
0035	35	R 1/2"	650	340	1060	70
0080	80	R 3/4"	940	460	1610	199
0100	100	R 1"	940	460	1610	240
0150	150	R 1"	1140	680	1980	288
0225	225	R 1 1/2"	1140	680	1980	420
0300	300	R 1 1/2"	1580	770	2190	530
0375	375	R 1 1/2"	1580	770	2190	795

Erläuterungen

2 Volumenstrom bezogen auf Ansaugzustand des Verdichters (1 bar, +20°C), bei Drucklufteintritt +35°C und Betriebsüberdruck 7 bar

Explanations

2 Volume flow referred to the suction status of the air compressor (1 bar, +20°C), compressed air inlet temperature +35°C and operating pressure 7 bar

Ausgabe / issue 01.09.2008

14.2 R & I - Fließbild

14.2 P & I - Diagrama de flujo

14.2 P & I - Schéma fonctionnel

14.2 P & I - Skjematisk diagram

14.2 P & I - Schematiskt diagram

14.2 P & I - Diagram

14.2 P & I - Fluxograma tipo

14.2 P & I - Schematisch diagram

14.2 P & I - Schema del flusso

14.2 P & I - Skematisk diagram

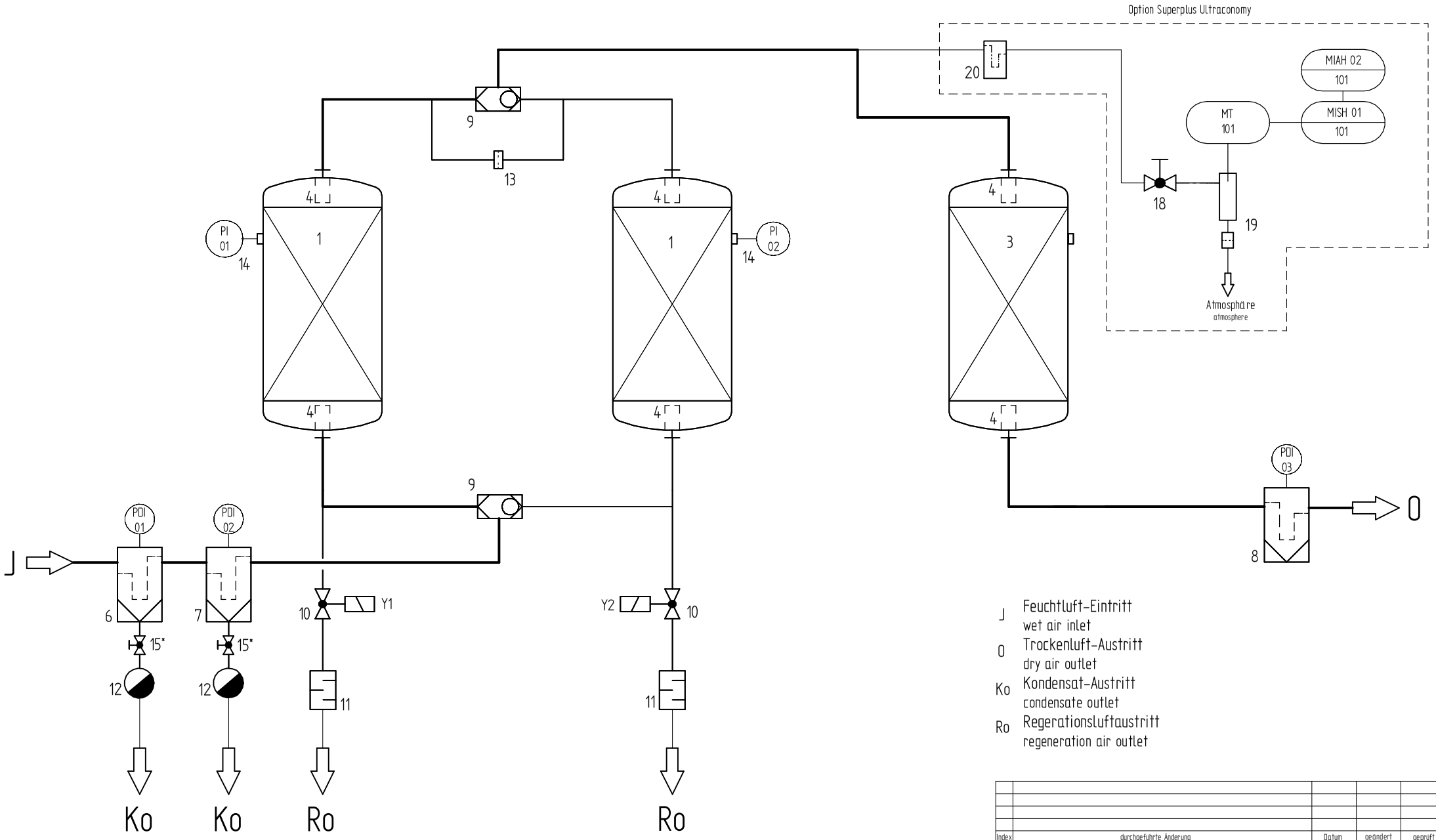

J Feuchtluft-Eintritt
wet air inlet

O Trockenluft-Austritt
dry air outlet

Ko Kondensat-Austritt
condensate outlet

Ro Regerationsluftaustritt
regeneration air outlet

Index	durchgeführte Änderung	Datum	geändert	geprüft

Donaldson. FILTRATION SOLUTIONS

Benennung
R&I-Fliessbild / P&I-Diagram
Ultrapure ALG
35 S – 375 S

gepaust

Schutzvermerk nach DIN 34

Allgemeintoleranzen DIN EN ISO 13920
Oberflächen DIN ISO 1302

	Datum	Name
gezeichnet	07.05.2012	Schnabel
geprüft		
Norm gepr.		

Auftrags-Nr.

Artikel-Nr.

Werkstoff

Maßstab

Zeichnungs-Nr.: 6MP1-000804

Blatt

Ersatz für:
ersetzt durch:
entstanden aus:

Blätter:

* ab Größe 80 S
from size 80 S

Technische Änderungen vorbehalten
Technical alterations reserved

14

14.3 Maßblatt

14.3 Dimensions Sheet

14.3 Hoja de medidas

14.3 Folha de medidas

14.3 Fiche des dimensions

14.3 Matenblad

14.3 Måleark

14.3 Foglio delle misure

14.3 Dimensionsblad

14.3 Måleark

Größe Size	DN [G]	A [mm]	B [mm]	C [mm]	D [mm]	E [mm]	F [mm]	G [mm]	H [mm]	I [mm]	J [mm]	K [mm]	L [mm]
35 S	1/2	650	340	1060	700	310	255	255	640	620	6,5	215	315
80 S	3/4	940	460	1610	800	415	315	340	920	880	13	360	460
100 S	1	940	460	1610	800	415	315	340	920	880	13	360	460
150 S	1	1140	680	1980	1075	535	465	535	1120	1080	13	580	680
225 S	1 1/2	1140	680	1980	1075	535	465	535	1120	1080	13	580	680
300 S	1 1/2	1140	680	1980	1075	535	465	535	1120	1080	13	580	680
375 S	1 1/2	1580	770	2190	1250	660	530	620	1560	1520	13	670	770

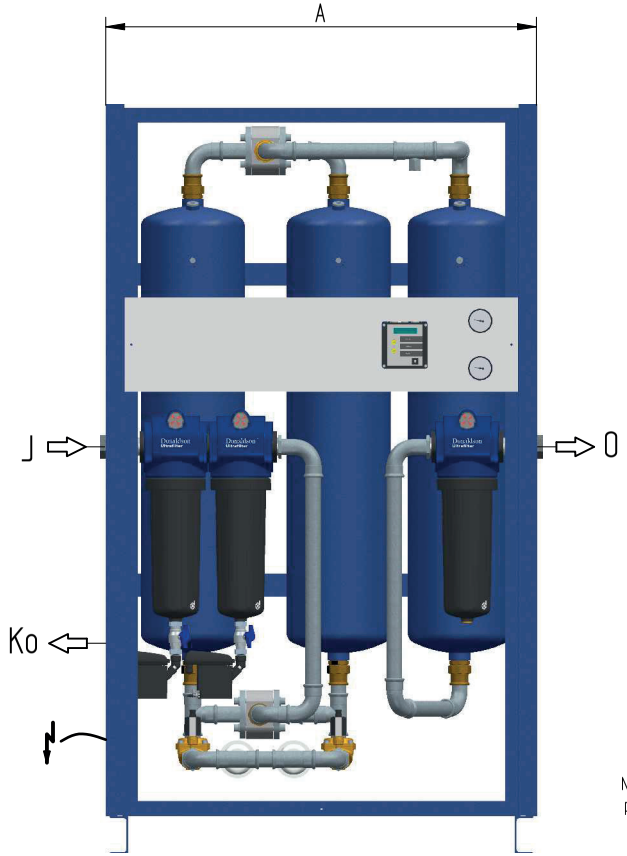

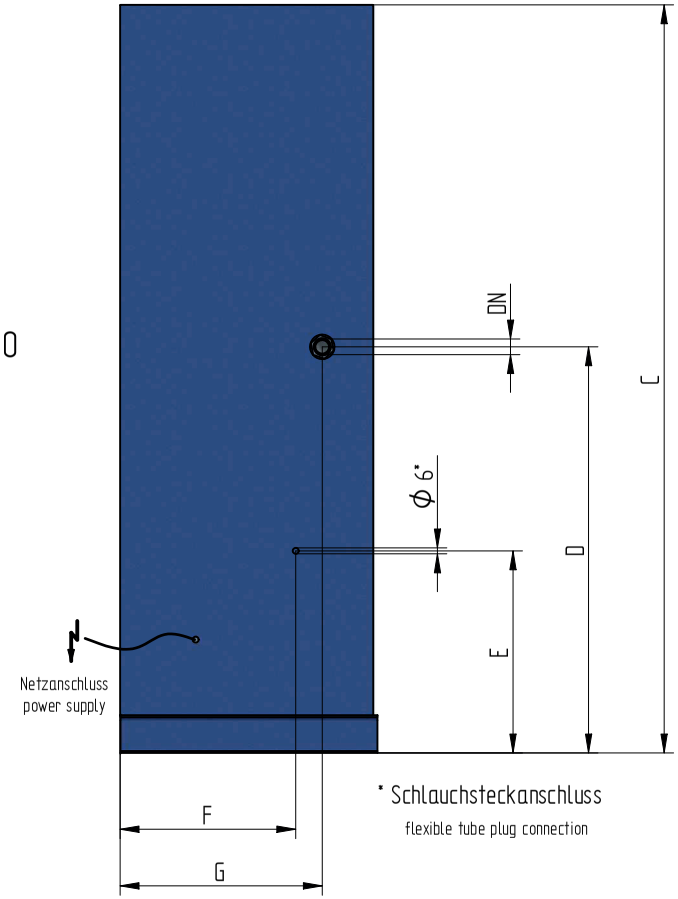

* Schlauchsteckanschluss
flexible tube plug connection

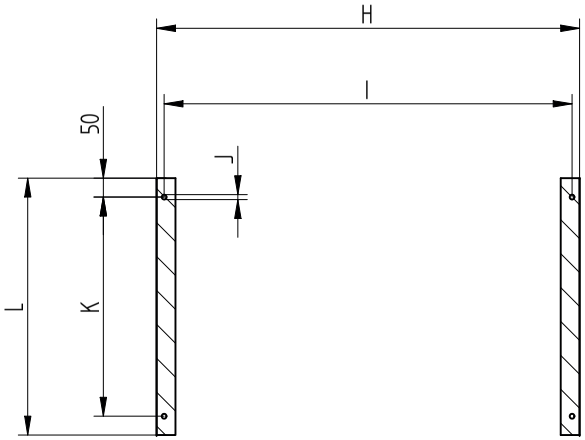

Fundamentplan
foundation plan

J Feuchtluft-Eintritt
wet air inlet

O Trockenluft-Austritt
dry air outlet

Ko Kondensat-Austritt
condensate outlet

Technische Änderungen vorbehalten
technical alterations reserved

Index	carried out changes	Date	prepared	approved

Donaldson. FILTRATION SOLUTIONS

Donaldson Filtration Deutschland GmbH
Bässingstraße 1 Telefon 02129/569-0
D-42781 Haan Telefax 02129/569-100

General tolerances
DIN EN ISO 13920
DIN ISO 2768-m-S
Surface DIN ISO 1302

Protective note acc. DIN 34

Order No.

	Date	Name
prepared	01.10.2013	Schnabel
approved		

Article No.

Description: Massblatt / Dimension Sheet
Ultrapure ALG
35 S – 375 S , 10/13

Material

Drawing No.: 6MP1-001304

Page

Scale

Replacement for:
replaced by:
developed from:

Pages

14

14.4 Übersichtszeichnung

14.4 General Arrangement

14.4 Plano general

14.4 Esquema geral

14.4 Dessin d´ensemble

14.4 Overzichtstekening

14.4 Oversiktstegning

14.4 Disegno sinottico

14.4 Översiktsritning

14.4 Oversigtstegning

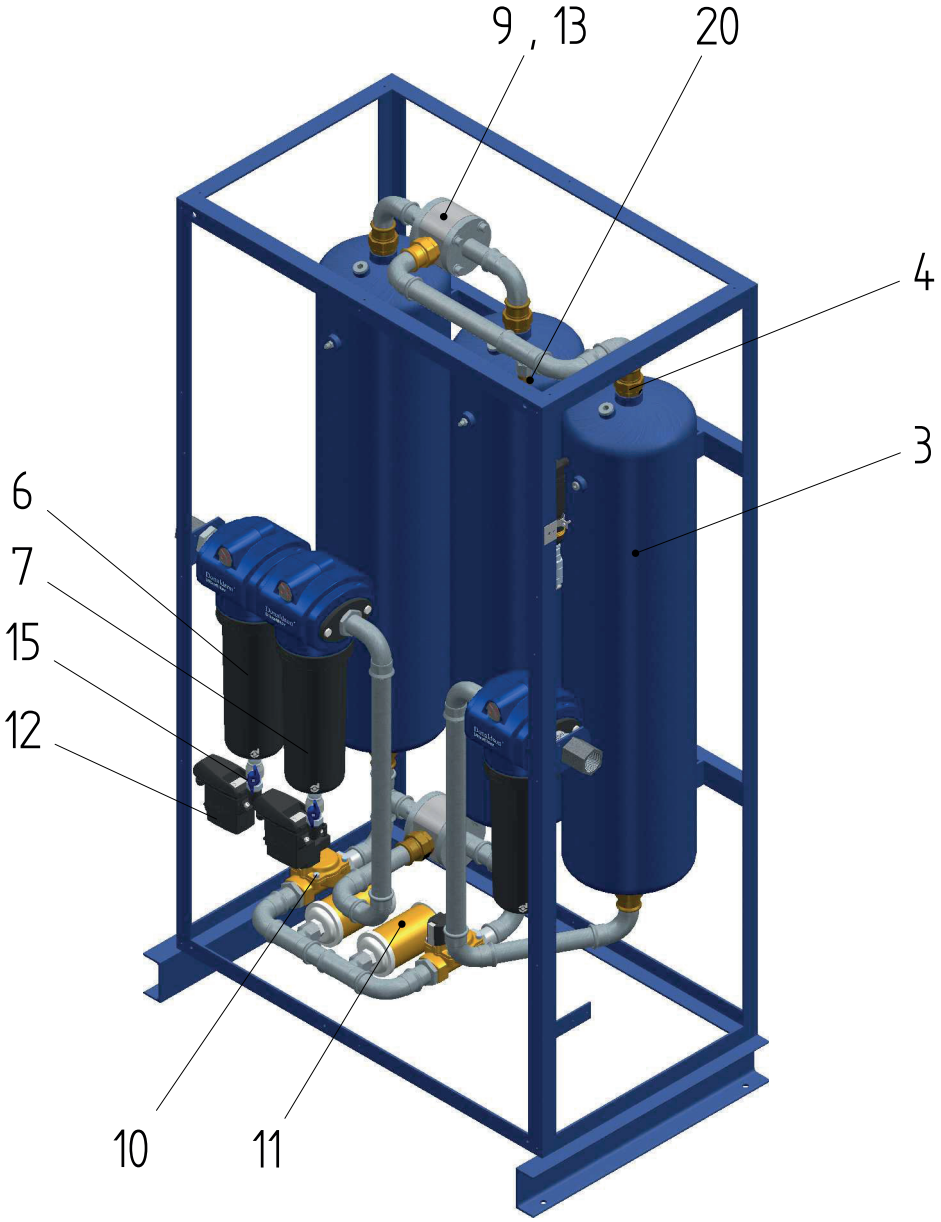

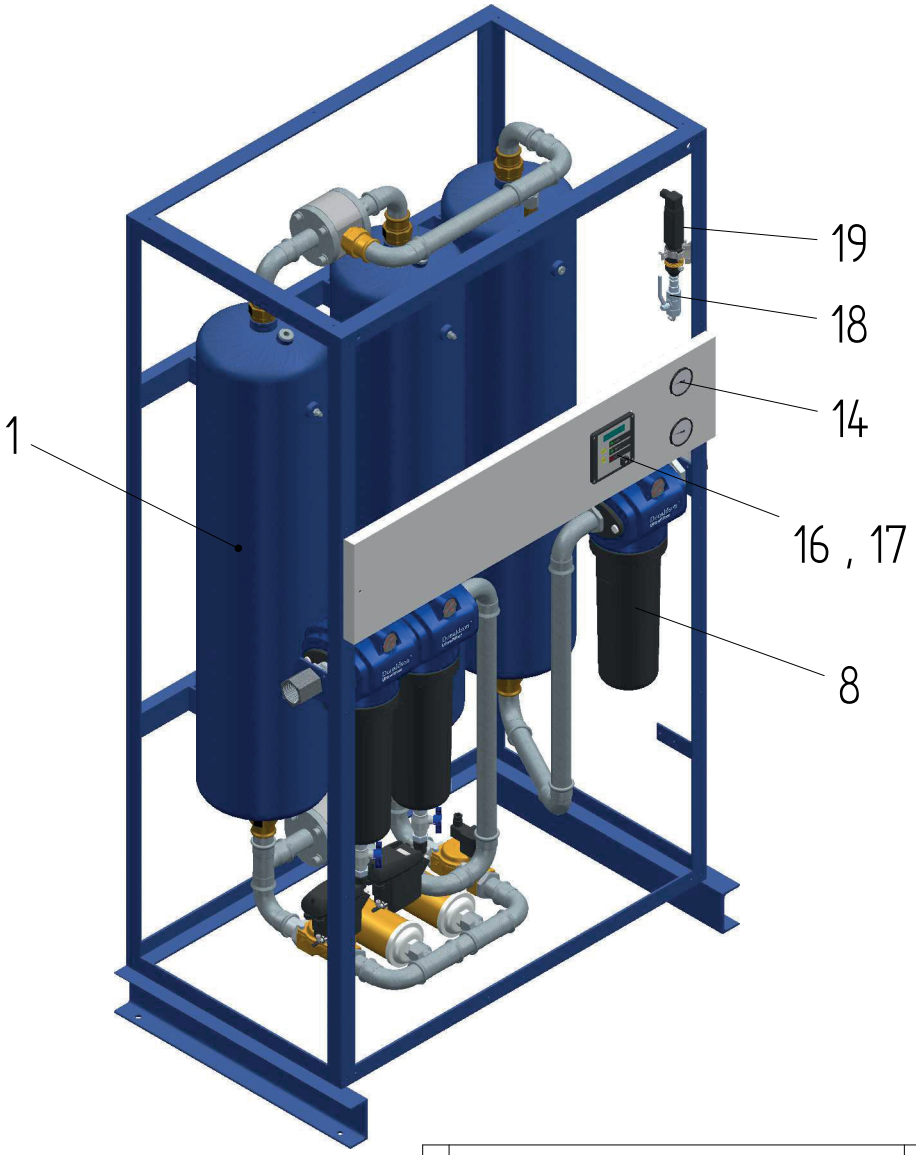

Index	carried out changes	Date	prepared	approved

Donaldson. FILTRATION SOLUTIONS

Donaldson Filtration Deutschland GmbH
Bässingstraße 1 Telefon 02129/569-0
D-42781 Haan Telefax 02129/569-100

General tolerances
DIN EN ISO 13920
DIN ISO 2768-m-S
Surface DIN ISO 1302

Protective note acc. DIN 34

Order No.

	Date	Name
prepared	01.10.2013	Schnabel
approved		

Article No.

Description
Übersichtszeichnung / General Arrangement
Ultrapure ALG 80 S - 375 S

Material

Drawing No.
6MP1-001376

Page

Scale

Replacement for:
replaced by:
developed from:

Pages

Technische Änderungen vorbehalten
technical alterations reserved

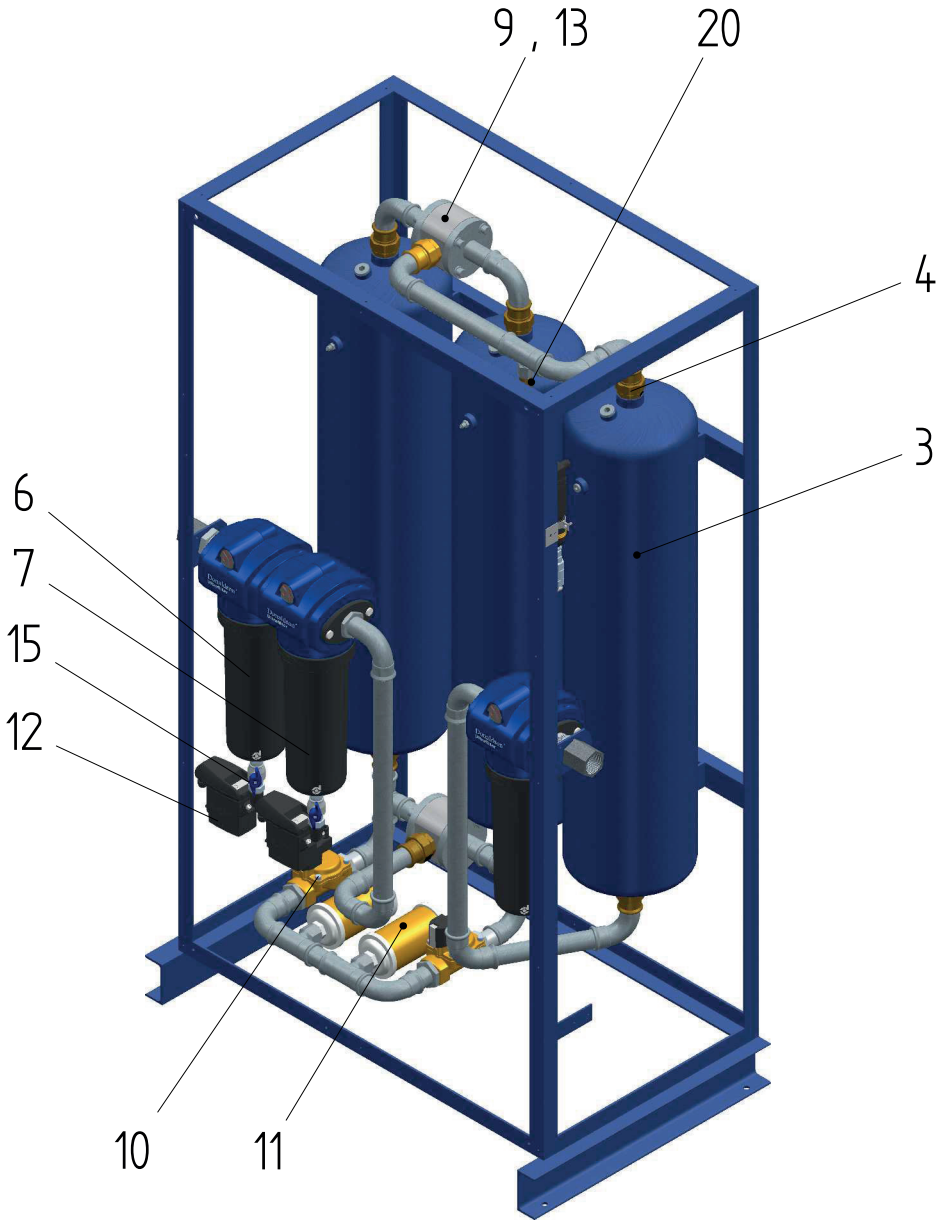
9 , 13
20
4
3
6
7
15
12
10
11

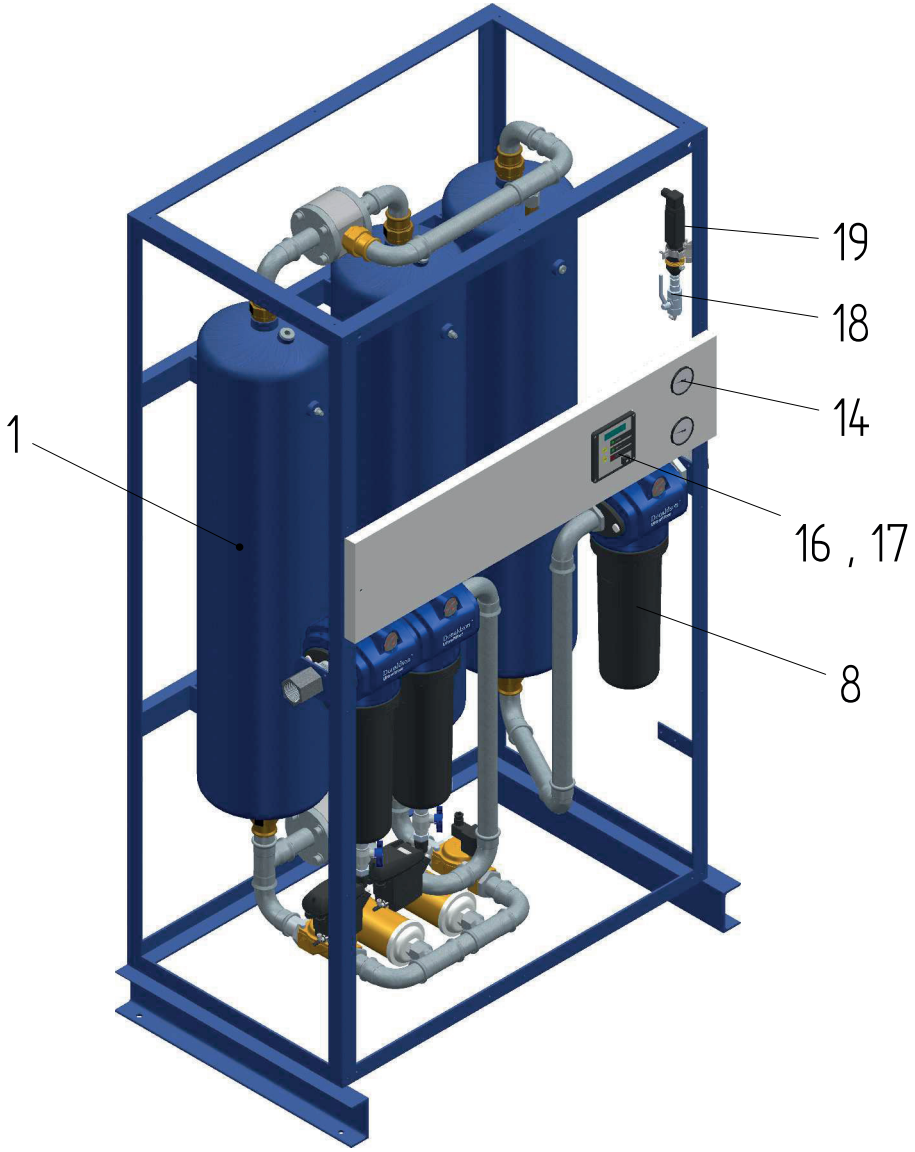
19
18
14
1
16 , 17
8

14.5 Service-Sets/ Geräte- / Ersatzteilliste

14.5 Service-Sets/ Lista de recambios e instrumentos

14.5 Service-Sets/ Nomenclature des équipments

14.5 Service-Sets/ Utstyrsliste

14.5 Service-Sets/ Instrument-& reservdelslista

14.5 Service-Sets/ Instrument and Spare Parts List

14.5 Service-Sets/ Lista de aparelhos

14.5 Service-Sets/ Lijst van apparaten

14.5 Service-Sets/ Lista degli equipaggiamenti

14.5 Service-Sets/ Instrument- og reservedelsliste

Ersatzteilliste / Spare Parts List
Ultrapure ALG 80 S - 375 S , 115V
ab 10.2013 / from 10.2013
Rev. 08/2021

Pos. Item	Menge Quantity	Benennung Description						
			80 S	100 S	150 S	225 S	300 S	375 S
1	2	Trockenmittelbehälter MS Desiccant vessel MS	---	---	---	---	---	---
2	---	---	---	---	---	---	---	---
3	1	Trockenmittelbehälter AK+OX Desiccant vessel AK+OX	---	---	---	---	---	---
4	6	Gasverteiler Flow distributor	1c963727	1c963727	1c963727	1c963728	1c963728	1c963728
5	--	Gasverteiler Flow distributor	---	---	---	---	---	---
6	1	Vorfilter 1. Stufe Prefilter 1st stage						
6.1	1	Filterelement "M" Filter catrigde	1c486131	1c486131	1c486131	1c486151	1c486151	1c486151
6.2	1	O-ring O-Ring	1c371252	1c371252	1c371252	1c371268	1c371268	1c371268
6.3	1	Econometer Econometer	1c485502	1c485502	1c485502	1c485503	1c485503	1c485503
7	1	Vorfilter 2. Stufe Prefilter 2nd stage						
7.1	1	Filterelement "S" Filter catrigde	1c486130	1c486130	1c486130	1c486150	1c486150	1c486150
7.2	1	O-ring O-Ring	1c371252	1c371252	1c371252	1c371268	1c371268	1c371268
7.3	1	Econometer Econometer	1c485502	1c485502	1c485502	1c485503	1c485503	1c485503
8	1	Nachfilter Afterfilter						
8.1	1	Filterelement "S" Filter catrigde	1c486130	1c486130	1c486130	1c486150	1c486150	1c486150
8.2	1	O-ring O-Ring	1c371252	1c371252	1c371252	1c371268	1c371268	1c371268
8.3	1	Econometer Econometer	1c485502	1c485502	1c485502	1c485503	1c485503	1c485503
9	2	Wechselventil Shuttle valve						
9.1 **	1	Verschleissteilsatz Wechselventil (oben + unten) Servicekit shuttle valve (upper + lower)	1c987064	1c987064	1c987064	1c987065	1c987065	1c987065
10	2	2/2-Wege Magnetventil 2/2-way solenoid valve	1c907366	1c907366	1c907366	1c907371	1c907371	1c907370
10.1	2	Verschleissteilsatz Magnetventil Servicekit solenoid valve	1c907369	1c907369	1c907369	1c907374	1c907374	1c907374
11	2	Schalldämpfer Silencer	1C900925-AS	1C900925-AS	1C900925-AS	1C900919-AS	1C900919-AS	1C900919-AS
12	1	Kondensatableiter Condensate drain	1c334510-63	1c334510-63	1c334510-63	1c334510-63	1c334510-63	1c334410
12.1	1	Verschleissteilsatz Kondensatableiter Servicekit condensate drain	1c334461	1c334461	1c334461	1c334461	1c334461	1c334461
13	1	Regenerationsluftdüse Regeneration air orifice	1c963746-AS	1c963746-AS	1c963746-AS	1c963748-AS	1c963748-AS	1c963748-AS
14	2	Manometer Pressure gauge	1c911040	1c911040	1c911040	1c911040	1c911040	1c911040
15	2	Kugelhahn Ball valve	1c909701	1c909701	1c909701	1c909701	1c909701	1c909701
16	1	Steuerung Control						
16.1	1	Ersatz Steuerung Standard Replacement control Standard	1c931432	1c931432	1c931432	1c931432	1c931432	1c931429
16.2	1	Ersatz Steuerung Superplus Replacement control Superplus	1c931433	1c931433	1c931433	1c931433	1c931433	1c931430
17	1	Zusatzsteuerung Additional control board	1c931427	1c931427	1c931427	1c931427	1c931427	1c931427
18 *	1	Kugelhahn Ball valve	1c909604	1c909604	1c909604	1c909604	1c909604	1c909604
19 *	1	Taupunkttransmitter Dewpoint transmitter	1c525532-AS	1c525532-AS	1c525532-AS	1c525532-AS	1c525532-AS	1c525532-AS
20 *	1	Inline Filter Inline filter						
20.1 *	1	Filterelement Filter cartrigde	1c900902	1c900902	1c900902	1c900902	1c900902	1c900902
21	1	Dichtungssatz Rohrleitung Set of seals pipe for pipelines						
22	1	Ersatzfüllung MS Spare filling MS	1x 1c927530 1x 1c927522	3x 1c927529 1x 1c927522	2x 1c927530 1x 1c927520	5x 1c927529 1x 1c927520	4x 1c927530 2x 1c927520	5x 1c927530 5x 1c927522
24	1	Ersatzfüllung AK Spare filling AK	1c985564	1c985572	1c985580	1c985588	1c985596	1c985604
25	1	Ersatzfüllung OX Spare filling OX	1c985764	1c985772	1c985780	1c985788	1c985796	1c985804

* nur Superplus Ultraconomy
* only Superplus Ultraconomy

** inklusiv Pos. 6 Regenerationsluftdüse (0050-1000)
** included Item 6 Regeneration air orifice (0050-1000)

Schutzvermerk nach DIN 34 !
Protected acc. to DIN 34 !

14

14.6 Elektrodokumentation

14.6 Electrical Documentation

14.6 Documentación eléctrica

14.6 Documentação eléctrica

14.6 Documentation sur la partie électrique

14.6 Elektrische documentatie

14.6 Elektrisk dokumentasjon

14.6 Documentazione elettrica

14.6 Elektrisk dokumentation

14.6 El-dokumentation

24.01.2011

Donaldson
FILTRATION SOLUTIONS

Donaldson Filtration Deutschland GmbH
Industrial Filtration Solutions
Büssingstraße 1
D-42781 Haan
Tel.: +49-02129-569-0 * Fax: +49-02129-569-100
www.donaldson.com

Benennung / Description	Ultrapac HED, ALD, MSD, Oilfreepac OFP, Ultrapure ALG
Typ / Type	0005 - 1000 (Ultrapac, Oilfreepac) / 35 S - 375 S (Ultrapure)
Zeichnung-Nummer / Drawing-number	C3-03046
Gültig ab / Valid from	01/2011

Artikel-Nummer / Article-number

Seiten / Pages 7

Inhaltsverzeichnis / contents

Spalte X: eine automatisch erzeugte Seite wurde manuell nachbearbeitet

ufiinDGB 20.09.1996

Seite/page	Seitenbenennung/page-title		Datum/date	Bearb.	X
1	Deckblatt / Coverpage		28.01.11	STS	
2	Inhaltsverzeichnis / Contents		28.01.11	STS	X
3	Steuerungsplatine / Control board Ultrapac		28.01.11	STS	
4	Steuerungsplatine / Control board Ultrapure		28.01.11	STS	
5	Zusatzplatine / Additional control board Ultrapure		28.01.11	STS	
6	Steuerungsplatine / Control board Oilfreepac		28.01.11	STS	
7	Zusatzplatine / Additional control board Oilfreepac		28.01.11	STS	

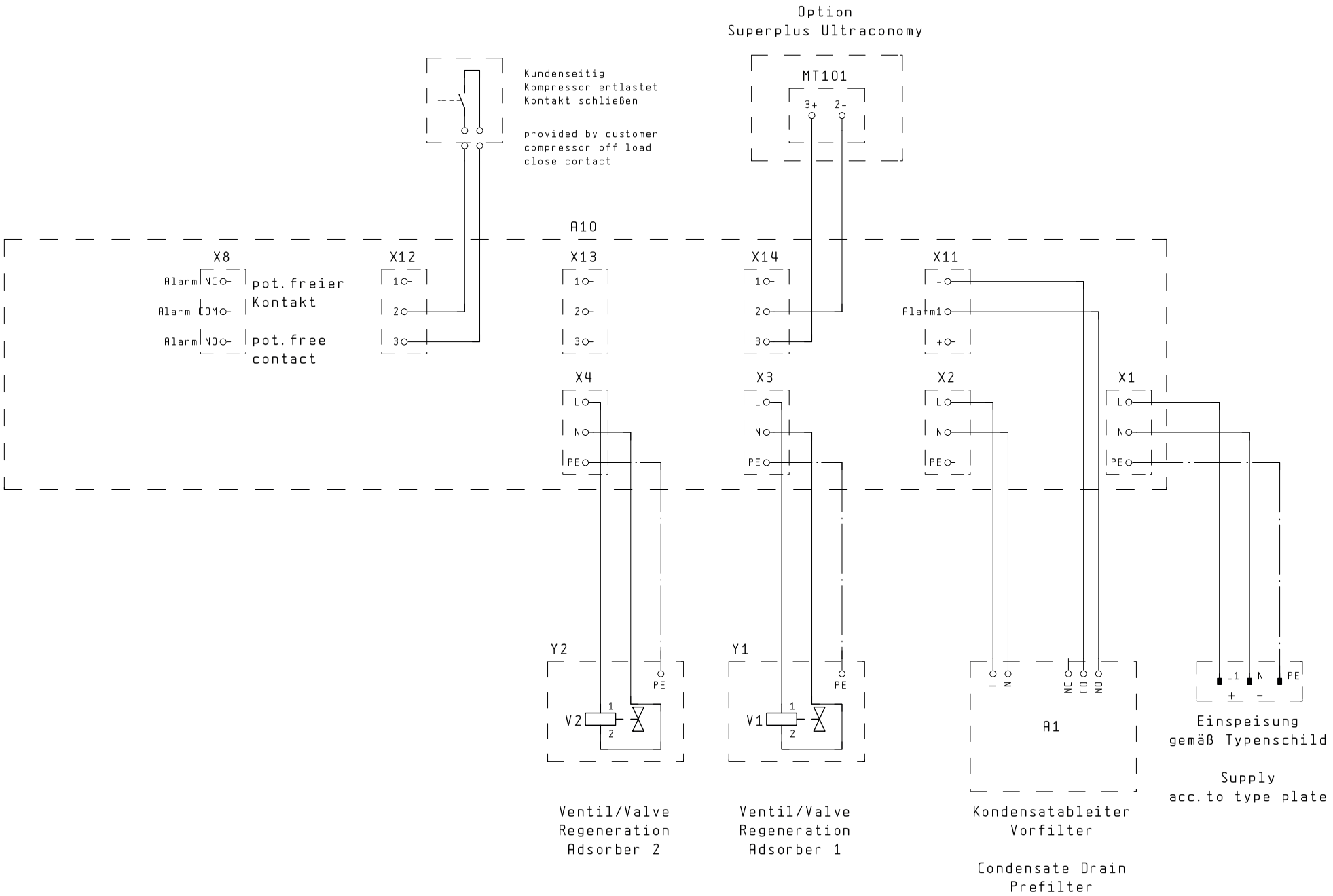

			DATE		Schaltplan / Wiring diagram		Steuerungsplatine / Control board Ultrapac	C3-03046
			NAME	STS				
			PLOT	01.08.14				
CHANGES	DATE	NAME	FORM.	EPLAN 4.10 : 14.09.93	ORIG.	EST. WITH	EST. BY	

SH. 3
7 SHS

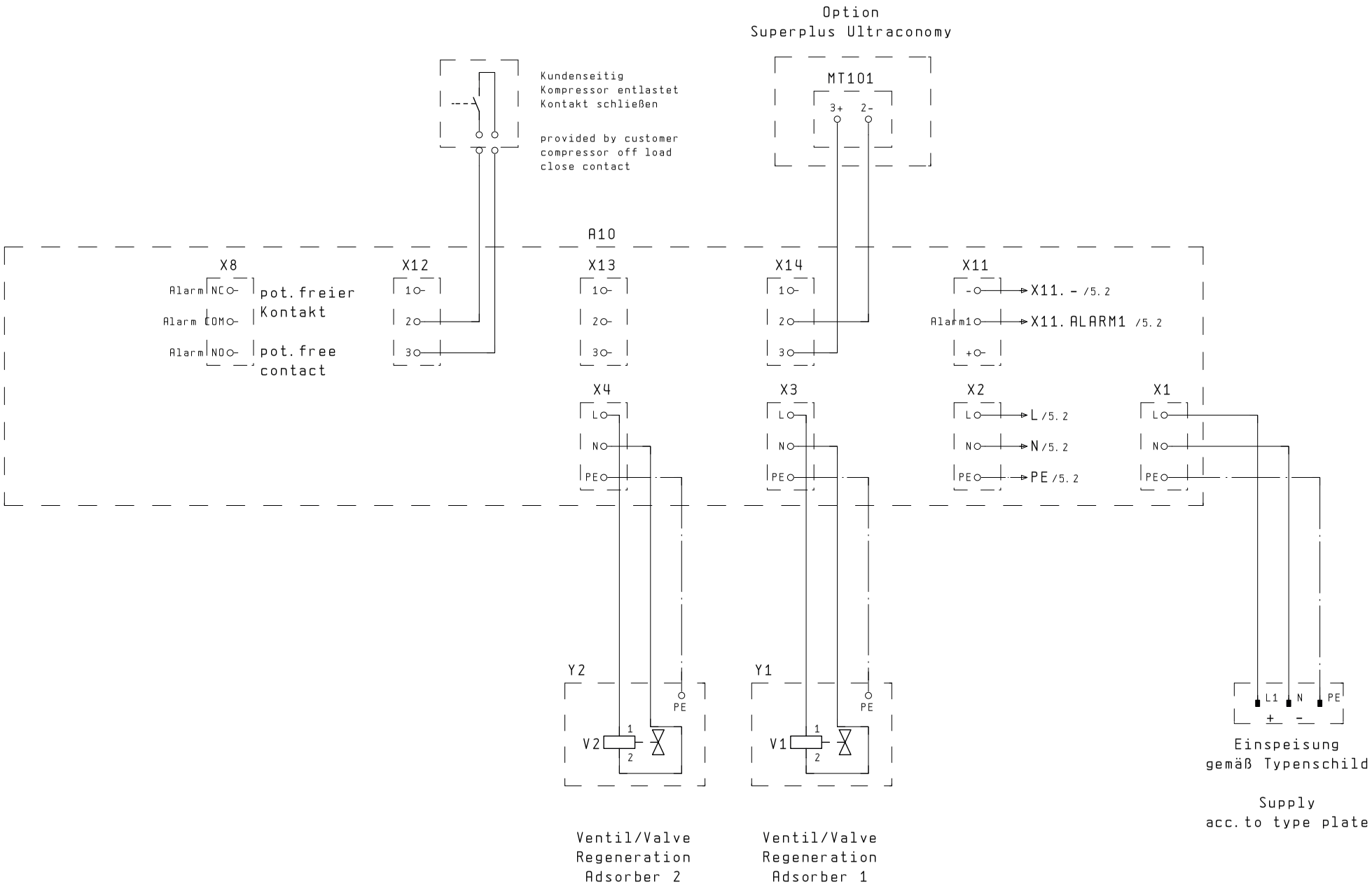

3 5

			DATE		Schaltplan / Wiring diagram		Steuerungsplatine / Control board Ultrapure
			NAME	STS			
			PLOT	01.08.14			
CHANGES	DATE	NAME	FORM.	EPLAN 4.10 : 14.09.93	ORIG.	EST. WITH	EST. BY

C3-03046

SH. 4
7 SHS

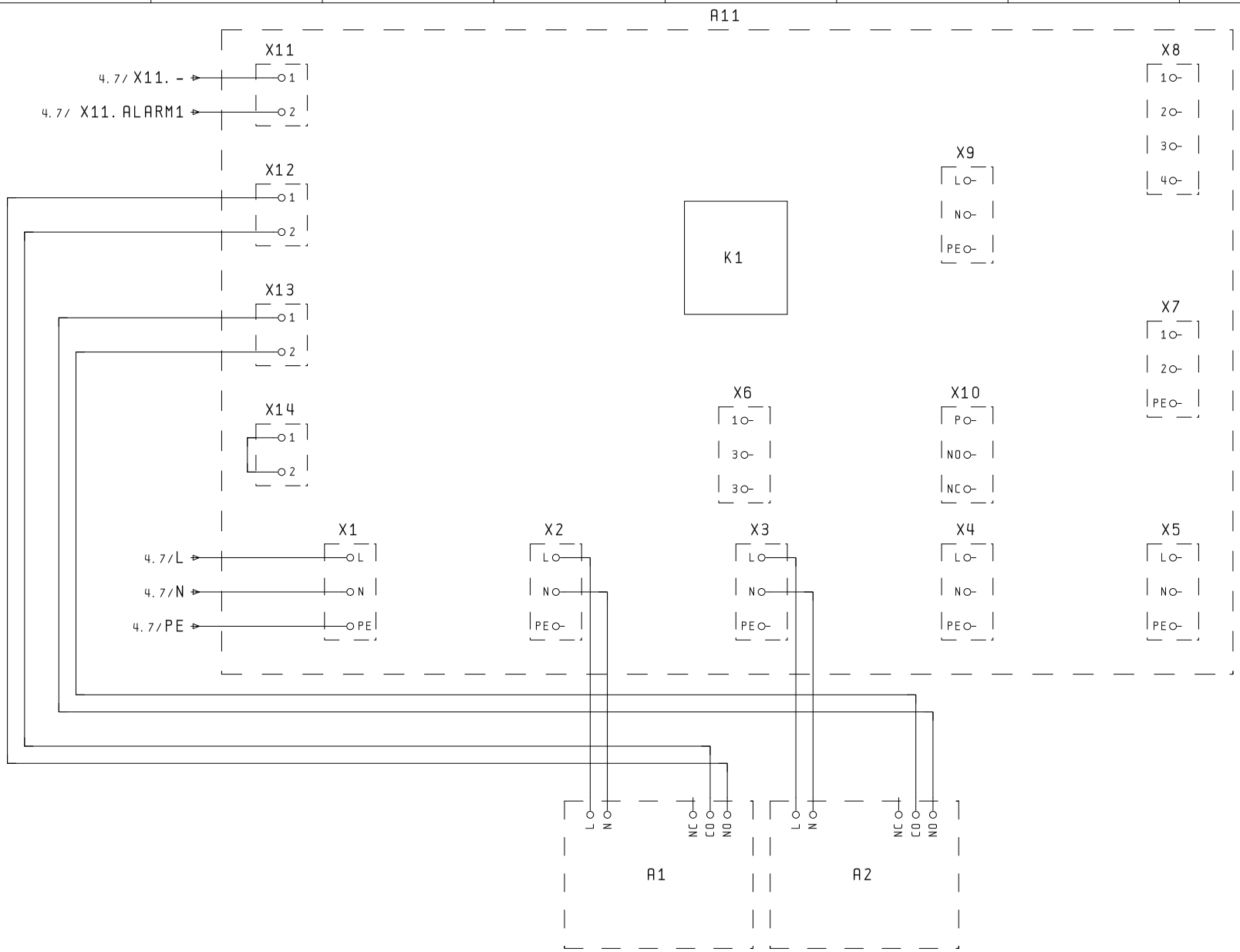

4 6

			DATE		Schaltplan / Wiring diagram		Zusatzplatine / Additional control board Ultrapure
			NAME	STS			
			PLOT	01.08.14			
CHANGES	DATE	NAME	FORM.	EPLAN 4.10 : 14.09.93	ORIG.	EST. WITH	EST. BY

C3-03046

SH. 5 / 7 SHS

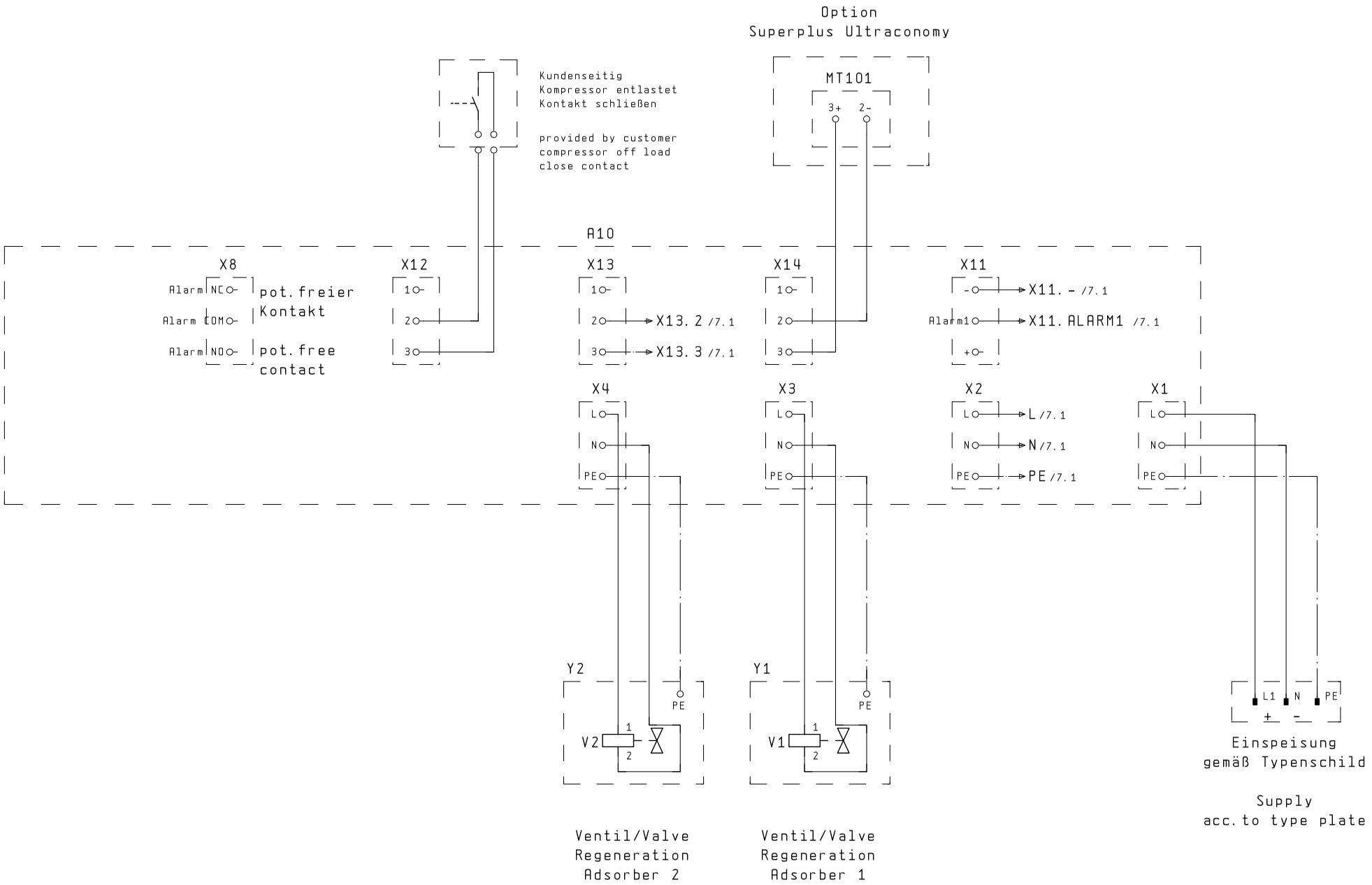

5 7

			DATE		Schaltplan / Wiring diagram		Steuerungsplatine / Control board Oilfreepac
			NAME	STS			
			PLOT	01.08.14			
CHANGES	DATE	NAME	FORM.	EPLAN 4.10 : 14.09.93	ORIG.	EST. WITH	EST. BY

C3-03046

SH. 6
7 SHS

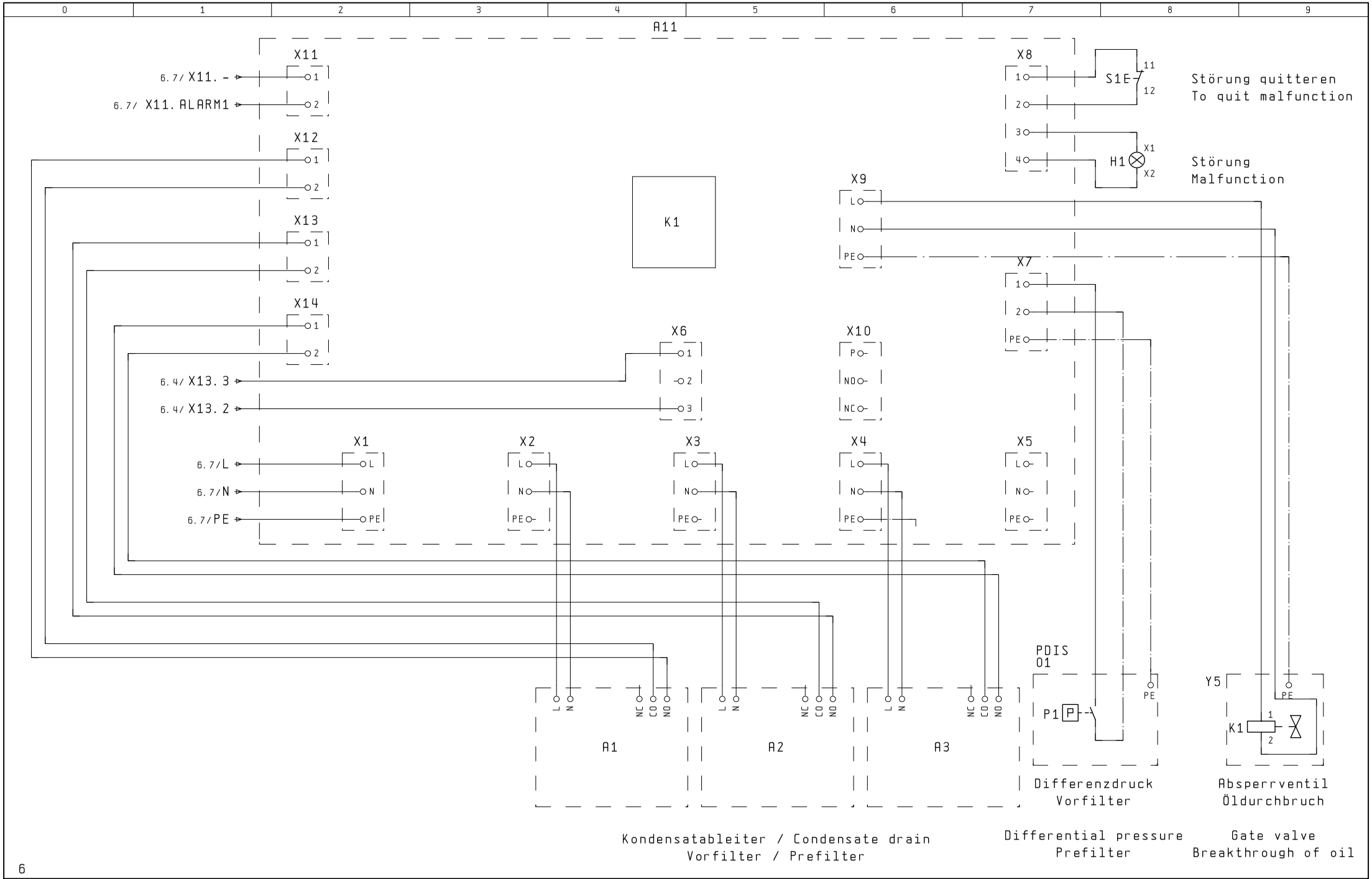

6

			DATE		Schaltplan / Wiring diagram	Zusatzplatine / Additional control board Oilfreepac	C3-03046
			NAME	STS			
			PLOT	01.08.14			
CHANGES	DATE	NAME	FORM.	EPLAN 4.10 : 14.09.93	ORIG. / EST. WITH / EST. BY		SH. 7 / 7 SHS

14.7 Hersteller- und Zubhördokumentation

14.7 Documentación de los fabricantes y accesorios

14.7 Documentations du fabricant et documentations sur les accessoires

14.7 Produsent- og utstyrsdokumentasjon

14.7 Tillverkar- och tillbehörsdokumentationer

14.7 Manufacturer and Accessory Documentation

14.7 Documentação do fabricante e dos acessórios

14.7 Documentatie over fabrikant en accessoires

14.7 Documentazioni del produttore e degli accessori

14.7 Producent- og tilbehørsdokumentation

Operation Manual

GB

Donaldson®
Ultrafilter

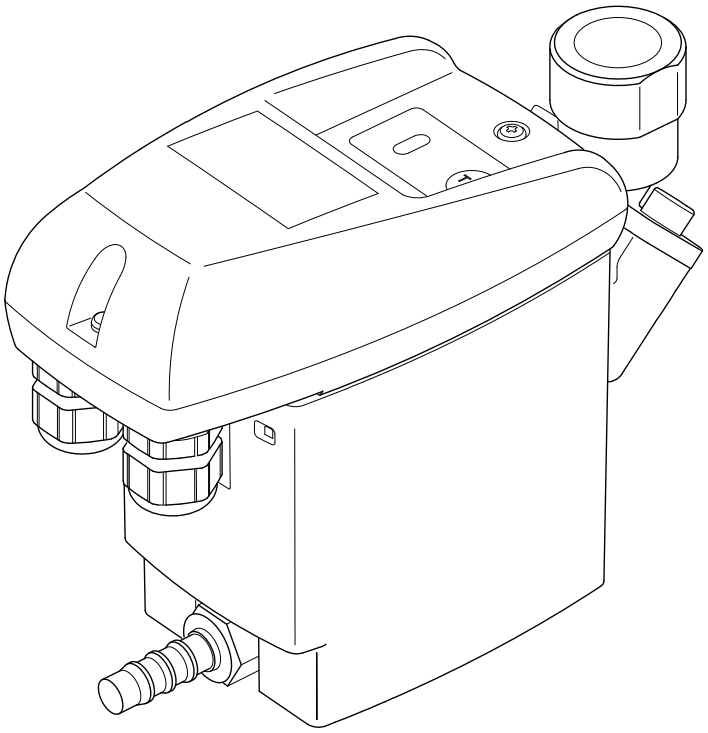

Condensate Drain
Ultramat® UFM-D05

IOM_UFM-D05_GB_R07/ 09.08.2017

Originalanleitung in Deutsch

Donaldson.

EU Declaration of Conformity

We hereby declare that the products indicated hereafter, in the delivered performance, comply with the stipulations of the relevant standards. This declaration only refers to products in the condition in which they have been placed into circulation. Parts which have not been installed by the manufacturer and / or modifications which have been implemented subsequently remain unconsidered.

Product designation:	**UFM**
Manufacturer:	Donaldson Filtration Deutschland GmbH Büssingstrasse 1 D – 42781 Haan
Product description and function:	Condensate drain for the electronically level-controlled discharge of condensate in the compressed-air system.

Types	Operating pressure (bar)		Supply voltage	
	min. 0,8	max. 16	95…240 VAC ±10% (50…60 Hz) / 100…125 VDC ±10%	24…48 VAC ±10% (50…60 Hz) / 18…72 VDC ±10%
UFM-D03	X	X	X	X
UFM-D05	X	X	X	X
UFM-D10	X	X	X	X

Low-Voltage Directive 2014/35/EU

Applied standards:	EN 61010-1:2010
Year of CE labelling:	11

The devices with a supply voltage of 24...48 VAC and 18...72 VDC do not come under the scope of the Low-Voltage Directive.

EMC Directive 2014/30/EU

Applied standards:	EN 61326-1:2006 EN 55011:2009 + A1:2010, group 1, class B

RoHs Directive 2011/65/EU

The stipulations of the 2011/65/EU Directive on the restriction of the use of certain hazardous substances in electrical and electronic equipment are observed.

Haan, 20.04.2016

Donaldson Filtration Deutschland GmbH

W. Bongartz
Product Line Manager Industrial

1 Pictograms and symbols 4
2 Safety instructions 4
3 Proper use 6
4 Exclusion from the scope of application 6
5 Technical data 7
6 Electrical data 8
7 Dimension drawing 9
8 Function 10
9 Installation 13
10 Electrical installation 16
11 Control and maintenance 19
12 Troubleshooting and fault elimination 22

1 Pictograms and symbols

Observe the installation and operating instructions

Observe the installation and operating instructions
(on the type plate)

General danger symbol (danger, warning, caution)

General danger symbol (danger, warning, caution) for supply voltage and supply voltage-carrying plant components

2 Safety instructions

Please check whether or not these instructions correspond to the device type.

Adhere to all advice given in these operating instructions. They include essential information which must be observed during the installation, operation and maintenance. Therefore it is imperative for the service technician and the responsible operator / technical staff to read these operating instructions prior to installation, start-up and maintenance.

The operating instructions must be accessible at any time at the place of application of the D05 .

In addition to these operating instructions, local or national regulations must be complied with, if necessary.

Make sure that the D05 is operated only within the permissible limit values indicated on the type plate. Any deviation involves a risk for persons and materials, and may result in malfunction and service failures.

Danger!

Compressed air!

Risk of serious injury or death through contact with quickly or suddenly escaping compressed air or through bursting plant components or plant components which are not secured.

Measures:

- Do not exceed the maximum operating pressure (see type plate).
- **Only carry out service measures when the system is pressureless.**
- Use pressure-resistant installation material only.
- The feed pipe must be tubed firmly. Discharge pipe: short, fixed pressure hose onto pressure-resistant pipe.
- Make sure that persons or objects cannot be hit by condensate or escaping compressed air.

Safety instructions

Danger!

Supply voltage!

There is the risk of an electric shock involving injury or death when coming into contact with non-insulated components carrying supply voltage.

Measures:

- During electric installations, all regulations in force need to be adhered to (e.g. VDE 0100 / IEC 60364).
- **When the control unit is open, service and installation works must only be undertaken when the system is deactivated.**
- **The removed control unit has no IP degree of protection.**
- All types of electrical works must be carried out by authorised and qualified personnel only.

Further safety instructions:

- For installation and operation, the national regulations and safety codes in force must also be adhered to.
- Do not use the D05 in hazardous areas.
- Regarding the inlet screw joints, excessive tightening forces must be avoided. This applies in particular to conical screw joints.
- The D05 will only function when voltage is applied.
- Do not use the test button for permanent drainage.
- Use genuine spare parts only. This is imperative to ensure perfect functioning.

Additional advice:

- The removed control unit has **no IP degree of protection**.
- During installation, use spanner flat at the feed pipe (wrenchsize SW27) as a back rest.
- The service unit must not be dismantled.

Caution!

Malfunction during operation!

Through incorrect installation and poor maintenance, malfunction may occur at the D05 .

Condensate which is not discharged may cause damage to plants and in production processes.

Measures:

- Condensate drainage which is reliable in performance directly optimises the compressed-air quality.
- To prevent damage and breakdowns, it is imperative to observe the following:
  - Exact compliance with the specifications of use and with the performance parameters of the D05, in connection with the case of application (see "Proper use" section)
  - Exact compliance with the installation- and operation instructions in this manual
  - Regular maintenance and control of the D05 in accordance with the instructions in this operating manual

3 Proper use

- The D05 is an electronically level-controlled condensate drain for compressed-air plants.
- The device is employed within the permissible performance parameters (see "Technical data").
- The D05 is able to drain condensate under operating pressure from the plant components virtually without compressed-air loss.
- For its function, the D05 requires an supply voltage and an operating pressure (see "Technical data").
- As far as the employment in plants with increased demands on compressed air is concerned (food industry, medical technology, laboratory equipment, special processes etc.), the operator must decide on measures for the monitoring of the compressed-air quality. These have an effect on the safety of the subsequent processes and may prevent damage to persons and plants.
- It is the task of the operator to ensure that the indicated conditions are met during the entire operating time.

4 Exclusion from the scope of application

- The D05 as a condensate drain **alone cannot** guarantee a defined compressed-air quality, for this purpose, other additional technical devices are required.
- D05 is **not** suitable for use in plants carrying vacuum or atmospheric ambient pressure or in ex-areas.
- The D05 must not be exposed to permanent direct solar or thermal radiation.
- The D05 must not be installed and operated in areas with an aggressive atmosphere.
- The D05 is not heatable and, therefore, not suitable for the use in areas where frost is likely to occur.
- The D05 is not suitable for CO_2 plants.

5 Technical data

min./max. operating pressure (see type plate)	0,8...16 bar (12...230 psi) or 1,2...16 bar (17...230 psi)
min./max. temperature (see type plate)	+1...+60 °C (+34...+140 °F) or +1...+70 °C (+34...+158 °F)
Condensate inflow	G ½ (NPT ½) internal max. screw-in depth 13,5 mm (½")
Condensate outflow	G ¼ Ø 8 ... 10 mm hose connector
Condensate	oil-contaminated + oil-free
Housing	aluminium + plastic, glass fibre-reinforced
Weight (empty)	1.0 kg (2.2 lbs)

This product has been tested to the requirements of CAN/CSA-C22.2 No. 61010-1-12, third edition, including a later version of the same standard incorporating the same level of testing requirements.

Max. performance for the "blue" climate zone – see also Chapter "Climate zones and performance data"

max. compressor performance	5 m³/min (175 scfm)
max. refrig.-dryer performance	10 m³/min (350 scfm)
max. filter performance	50 m³/min (1750 scfm)

6 Electrical data

Supply voltage (see type plate)	95…240 VAC ±10% (50…60 Hz) /100…125 VDC ±10% or 24…48 VAC ±10% (50…60 Hz) / 18…72 VDC ±10%
Power consumption	P = 0.6 ... 3 VA (W)
Recommended cable-jacket diameter	Ø 5.0…10 mm (0.20“…0.39“)
Recommended wire cross-section Spring-loaded terminal (voltage supply/relay)	0.75...1.5 mm² (AWG 16...20)
Recommended wire cross-section Screw terminal (voltage supply)	0.75...2.5 mm² (AWG 14...20)
Recommended wire cross-section Spring-loaded terminal (external test)	0.75...1.0 mm² (AWG 18...20)
Recommended wire cross-section Screw terminal (relay/external test)	0.75...1.5 mm² (AWG 16...20)
Recommended stripping of cable jacket (voltage supply/relay)	~ 30 mm (~ 1.18")
Recommended stripping of cable jacket (external test)	~ 90 mm (~ 3.54")
Recommended length of the wire end tube Spring-loaded terminal	~ 8 mm (~ 0.31 inch)
Recommended length of the wire end tube Screw terminal	~ 6 mm (~ 0.24 inch)
Connection data of the potential-free contact Switch to load *)	AC: max. 250V / 1A DC: max. 30V / 1A
Connection data of the potential-free contact Switch to low signal *)	min. 5 VDC / 10 mA
Connection data of the external test contact	on the unit side 5 VDC; switching current ≥ 0,5 mA
Protection class	IP 54
Overvoltage category (IEC 61010-1)	II

VAC = V alternating current
VDC = V direct current

*) The switching of loads means that the properties of the contact are no longer suitable for the switching of low signals.

7 Dimension drawing

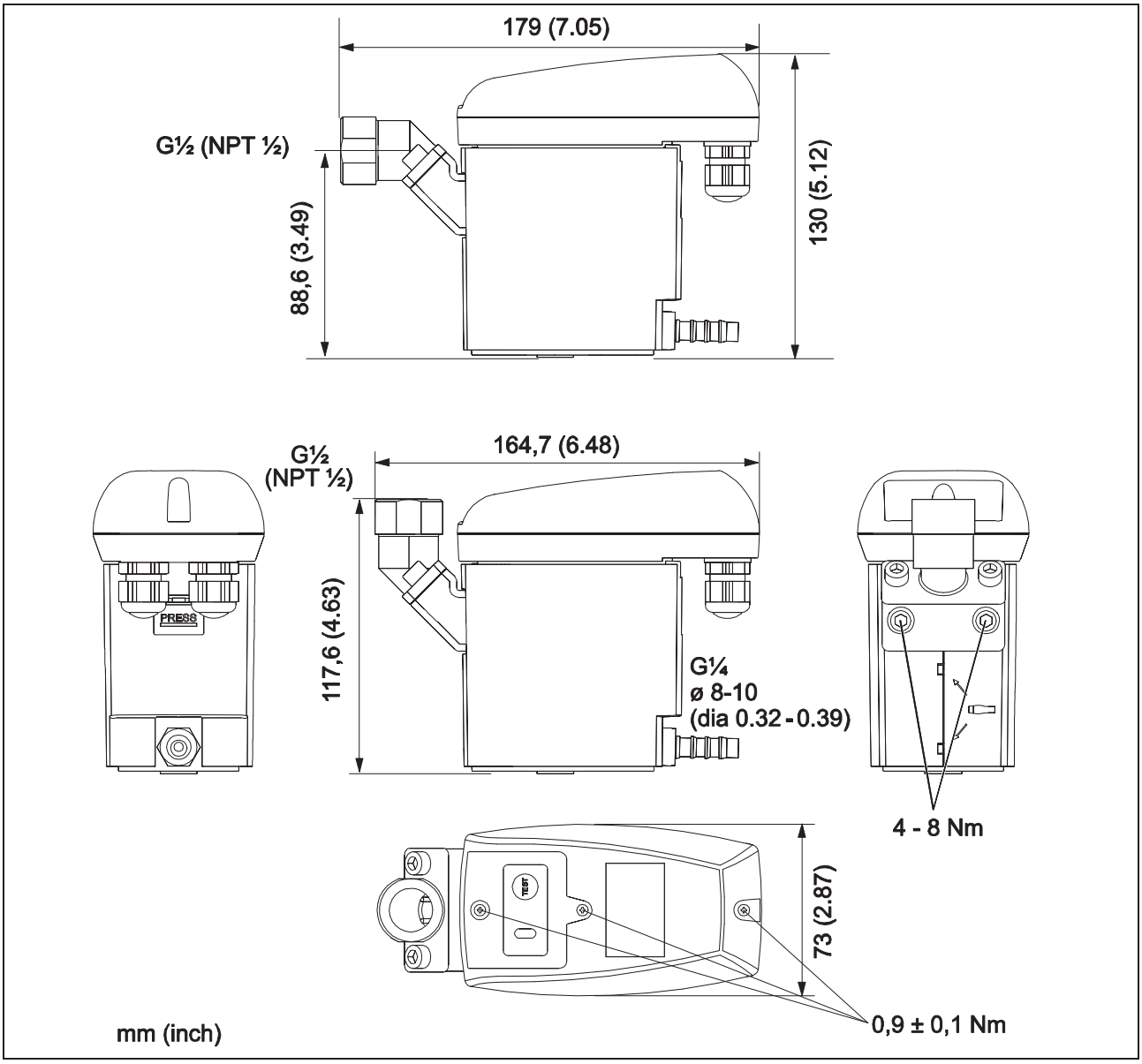

8 Function

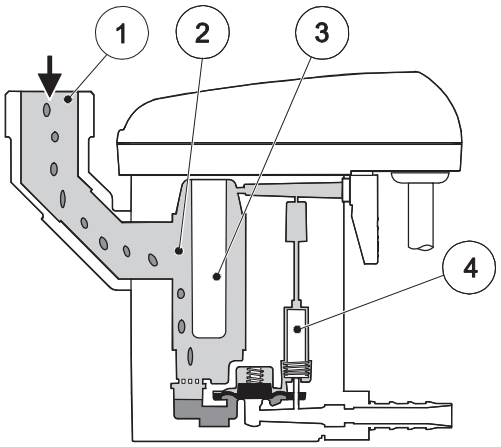

Via the inlet line (1) the condensate flows into the D05 and accumulates in the housing (2).

A capacitively functioning sensor (3) continuously registers the filling level and relays a signal to the electronic control as soon as the container is filled.

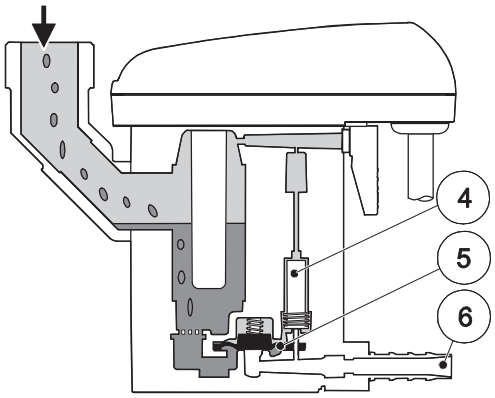

The pilot valve (4) is activated and the membrane (5) opens the outlet line to discharge the condensate (6).

When the D05 is empty, the outlet line is reclosed tightly in time before unnecessary compressed-air losses occur.

Function

At the D05, two LEDs indicate the individual operating states.

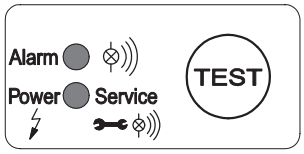

When applying supply voltage, the D05 carries out a **self-test**.

Both LEDs are lit for approximately 1 second, subsequently, the device changes over to the **"ready-to-operate"** state.

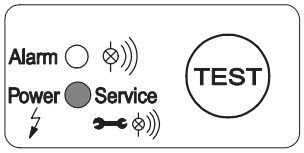

Ready to operate, voltage is applied.

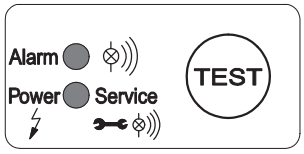

In the event that the condensate discharge is disturbed, an alarm mode will start which is indicated by the flashing of the red alarm LED.

Malfunction/alarm

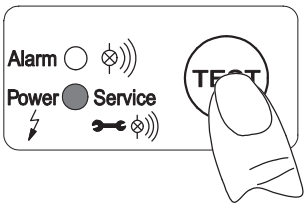

Test of the valve function (manual drainage): press and hold the button for approximately 2 s.

Test of the alarm function (see below): press and hold the button for at least 1 min.

Do not use for permanent drainage.

Switching sequence of the valve in the alarm mode

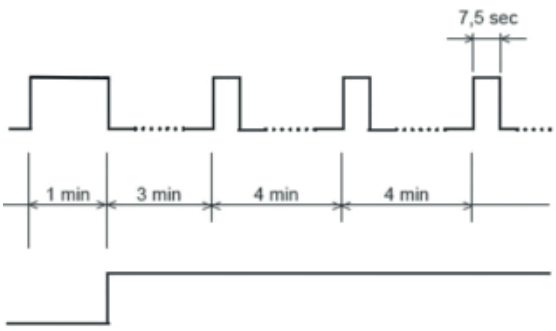

Trouble indication via a potential-free contact

Alarm mode:

In the event that the D05 is not empty after one minute, a trouble indication is released:

- The alarm LED flashes.
- The alarm relay switches over (the signal can be picked off potential-freely).
- The valve opens every four minutes for 7.5 seconds.
- When the malfunction has been eliminated, the D05 will switch back automatically into the normal mode.

Possible trouble sources include :

- Mistakes during installation
- Dropping below the minimum pressure
- Excessive accumulation of condensate (excess load)
- Blocked / obstructed outlet line
- Extreme amount of dirt particles
- Frozen pipework

The D05 releases a maintenance message for a service that is to be carried out.

Depending on the operating mode, a visual maintenance message (service) is activated which signalises the replacement of the service unit.

The maintenance message is indicated by the flashing supply voltage-LED "Power".

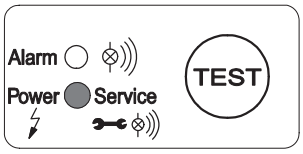

The maintenance message is released after 2 x 8.760 h or
one million switching cycles.

The maintenance signal is released when one of these two values is reached.

In the event of a power outage or when the energy supply is deactivated, the status of the timer will be maintained.

The activities to be carried out regarding maintenance are described in the chapter entitled "Check and maintenance".

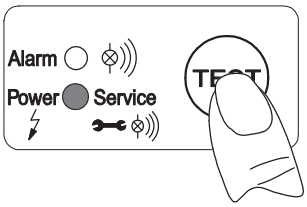

Prior to the replacement of the service unit, a reset needs to be carried out. The control unit is released by actuating the arresting hook. When removed, the TEST button must be pressed and held for at least five seconds.

9 Installation

Danger!

Compressed air!

Risk of serious injury or death through contact with quickly or suddenly escaping compressed air or through bursting plant components or plant components which are not secured.

Measures:

- Do not exceed the maximum operating pressure (see type plate).
- **Only carry out service measures when the system is pressureless.**
- Use pressure-resistant installation material only.
- The feed pipe must be tubed firmly. Discharge pipe: short, fixed pressure hose onto pressure-resistant pipe.
- Make sure that persons or objects cannot be hit by condensate or escaping compressed air.

Caution!

Malfunction during operation!

Through incorrect installation and poor maintenance, malfunction may occur at the D05 .

Condensate which is not discharged may cause damage to plants and in production processes.

Measures:

- Condensate drainage which is reliable in performance directly optimises the compressed-air quality.
- To prevent damage and breakdowns, it is imperative to observe the following:
  - Exact compliance with the specifications of use and with the performance parameters of the D05, in connection with the case of application (see "Proper use" section)
  - Exact compliance with the installation- and operation instructions in this manual
  - Regular maintenance and control of the D05 in accordance with the instructions in this operating manual

Note:

It is imperative to observe all hazard statements and warnings listed here.

Please also observe all regulations and notes regarding industrial safety and fire prevention at the place of installation.

As a matter of principle, only use suitable and appropriate tools and materials in a proper condition.

Do not use aggressive cleaners and improper devices such as high-pressure cleaners.

Please note that condensates may contain aggressive or harmful components. Therefore, skin contact should be avoided.

Condensate is subject to mandatory waste disposal. As such, it must be collected in suitable containers, and disposed of or processed properly.

Installation instructions:

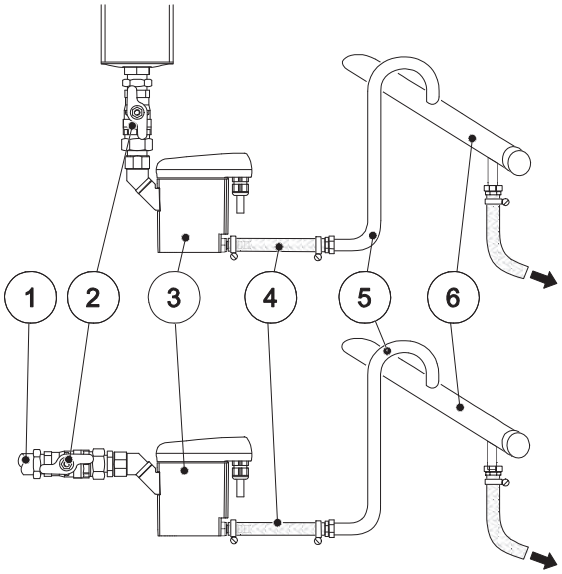

- Only the displayed installation position of the D05 (3) is permissible. Never install in a horizontal or any other tilted position.
- Feed pipe (1) and ball valve (2) at least G½.
- No filter or screen in the inlet line.
- Slope in the inlet line >1%.
- Use ball valves (2) only.
- Operating pressure: min. 0,8/1,2 bar (12/17 psig), max. 16 bar (230 psig). See type plate.
- Short pressure hose (4) fixed on a pressure-resistant pipe.
- The required minimum pressure increases by 0,1 bar (1,4 psi) per metre gradient in the discharge pipe (5).
- Discharge pipe (5) rising by max. 5 m (16,4ft).
- Install manifold (6) ½" with a slope of 1%.
- Introduce the discharge pipe (5) from the top into the manifold (6).
- Prior to the start-up, always carry out a leak test and verify the correct engagement of the control unit.

wrong	correct	
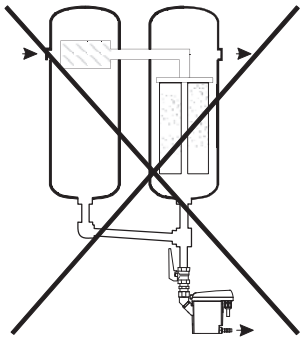	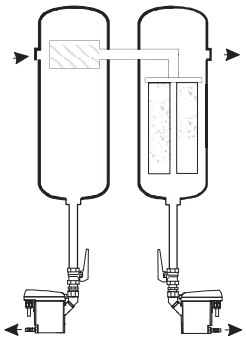	**Pressure differences!** Each condensate accumulation point must be drained separately.
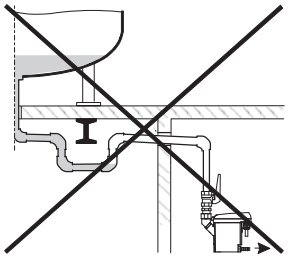	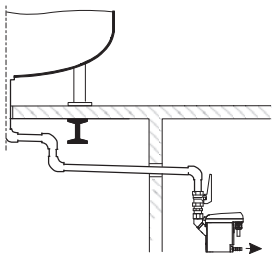	**Continuous slope!** Avoid a water pocket when installing the feed pipe
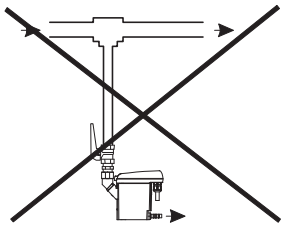	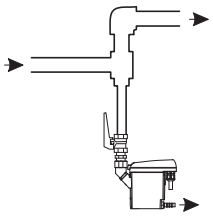	**Deflector area!** If drainage is to be carried out directly from the pipe, deflection of the air flow will be useful.
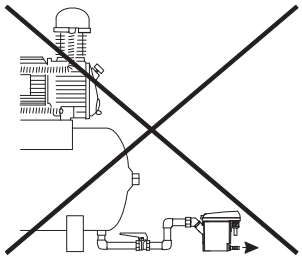	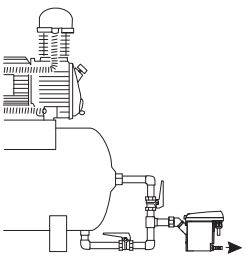	**Ventilation!** If the slope in the inlet line is not sufficient or if any other inflow problems occur, a venting line needs to be installed.

10 Electrical installation

Measures:

- During electric installations, all regulations in force need to be adhered to (e.g. VDE 0100 / IEC 60364).
- **When the control unit is open, service and installation works must only be undertaken when the system is deactivated.**
- **The removed control unit has no IP degree of protection.**
- All types of electrical works must be carried out by authorised and qualified personnel only.

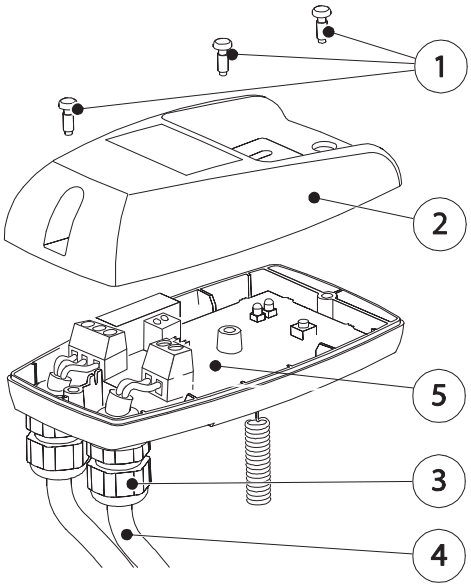

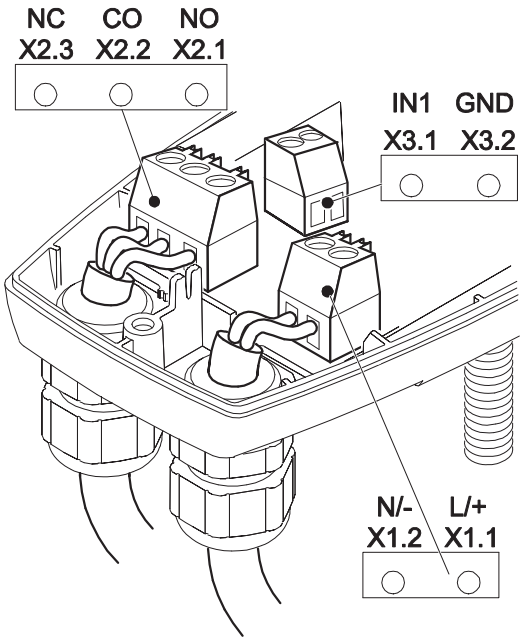

Note:

Power supply connection:

1. Read the permissible supply voltage on the type plate and make sure this voltage is observed.
2. For the supply voltage, a reliably accessible separator must be provided close-by (e.g. power plug or switch), which separates all current-carrying conductors.
3. At a low-voltage supply (< 50 VAC / < 75 VDC), only use a protective extra-low-voltage.
4. Carry out installation in accordance with VDE 0100 / IEC 60364.
5. Observe the terminal assignment.
6. Do not install when the device is energised.
7. Unscrew the screws (1) and remove the upper part of the cover (2).
8. Unscrew the threaded cable connection (3), remove the plug (if there is one), and lead the cable (4) for the power supply through.
9. Connect the cable (4) with terminals X1 (1.1, 1.2) (5).
10. Install the cables as shown (see also terminal assignment in the following text).
11. Tighten the threaded cable connection (3) with a slightly sealing effect.
12. Put on the upper part of the cover (2) and tighten the screws (1) fingertight.

Connection of the potential-free contact and of the external test:

1. Selection of the suitable cable.
2. Connection to X2 and X3, as shown in the adjacent illustration.
3. The installation steps are the same as for the power supply connection.
4. If the potential-free contact carries voltage that is dangerous in the case of contact, a corresponding separator must also be provided, as described above.
5. When using the potential-free contacts and the connection external test, sufficient clearance to the other parts of the unit, or suitable insulation in accordance with EN 60664-1 must be ensured.
6. When using a multiwire, common line for the connection of the potential-free contact and the external test, this line must be suitable for the highest occurring voltage and the intended temperature range with regard to its nominal ratings.

Terminal assignment supply voltage (operating voltage)

X 1		X 2			X 3	
L/+	N/-	NO	CO	NC	IN1	GND
phase	neutral	normally open	common	normally closed	external test (IN1)	GND
1.1	1.2	2.1	2.2	2.3	3.1	3.2

Power supply
- X 1.1 L/+
- X 1.2 N/-

L = Outer conductor
N = Neutral conductor

Terminal assignment low voltage (operating voltage)

X 1		X 2			X 3	
L/+	N/-	NO	CO	NC	IN1	GND
power	power	normally open	common	normally closed	external test (IN1)	GND
1.1	1.2	2.1	2.2	2.3	3.1	3.2

Power supply
- X 1.1 L/+
- X 1.2 N/-

Terminal assignment of the potential-free contact and of the external test

X 1		X 2			X 3	
L/+	N/-	NO	CO	NC	IN1	GND
power	power	normally open	common	normally closed	external test (IN1)	GND
1.1	1.2	2.1	2.2	2.3	3.1	3.2

Fault indication/potential-free contact:

- X 2.1 n.o.
- X 2.2 com.
- X 2.3 n.c.

n.c. - com. closed in the event of malfunction or power failure

n.o. - com. closed during normal operation
(closed current principle)

The contacts X2.1 - 2.3 are potential-free.

External test / remote control:

- X 3.1 external test (IN1)
- X 3.2 GND

Contacts connected = test active = discharge

Contacts open = test inactive

The contacts X 3.1 -3.2 are not potential-free.

Note:

At a low-voltage supply (< 50 VAC / < 75 VDC), only use a protective extra-low-voltage.
Tighten the threaded cable connection with a slightly sealing effect.

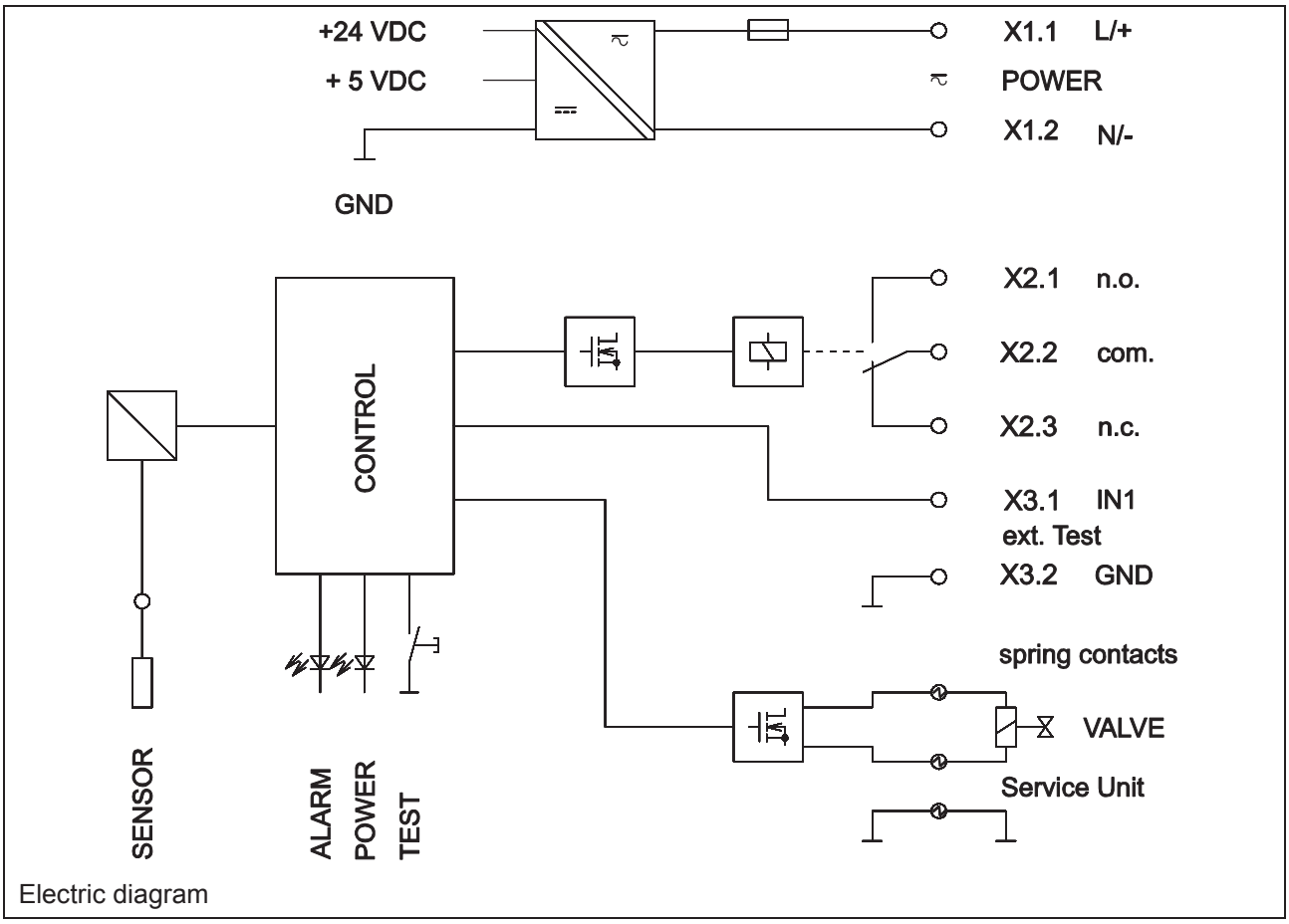

Electric diagram

11 Control and maintenance

Danger!

Compressed air!

Risk of serious injury or death through contact with quickly or suddenly escaping compressed air or through bursting plant components or plant components which are not secured.

Measures:

- Do not exceed the maximum operating pressure (see type plate).
- **Only carry out service measures when the system is pressureless.**
- Use pressure-resistant installation material only.
- The feed pipe must be tubed firmly. Discharge pipe: short, fixed pressure hose onto pressure-resistant pipe.
- Make sure that persons or objects cannot be hit by condensate or escaping compressed air.

Danger!

Supply voltage!

There is the risk of an electric shock involving injury or death when coming into contact with non-insulated components carrying supply voltage.

Measures:

- During electric installations, all regulations in force need to be adhered to (e.g. VDE 0100 / IEC 60364).
- **When the control unit is open, service and installation works must only be undertaken when the system is deactivated.**
- **The removed control unit has no IP degree of protection.**
- All types of electrical works must be carried out by authorised and qualified personnel only.

Caution!

Malfunction during operation!

Through incorrect installation and poor maintenance, malfunction may occur at the D05 .

Condensate which is not discharged may cause damage to plants and in production processes.

Measures:

- Condensate drainage which is reliable in performance directly optimises the compressed-air quality.
- To prevent damage and breakdowns, it is imperative to observe the following:
  - Exact compliance with the specifications of use and with the performance parameters of the D05, in connection with the case of application (see "Proper use" section)
  - Exact compliance with the installation- and operation instructions in this manual
  - Regular maintenance and control of the D05 in accordance with the instructions in this operating manual

Note:

It is imperative to observe all hazard statements and warnings listed here.

Please also observe all regulations and notes regarding industrial safety and fire prevention at the place of installation.

As a matter of principle, only use suitable and appropriate tools and materials in a proper condition.

Do not use aggressive cleaners and improper devices such as high-pressure cleaners.

Please note that condensates may contain aggressive or harmful components. Therefore, skin contact should be avoided.

Condensate is subject to mandatory waste disposal. As such, it must be collected in suitable containers, and disposed of or processed properly.

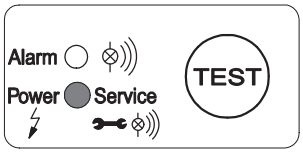

Maintenance recommendation:

After 2 x 8,760 operating hours or one million switching cycles, a maintenance message is released.

The green power LED flashes. Afterwards, or at the latest after two years (2 x 8,760 operating hours), the service unit (5) needs to be replaced.

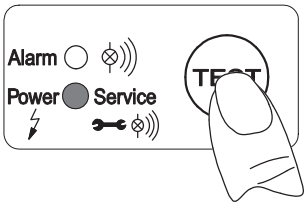

1. Prior to the replacement of the service unit, a reset needs to be carried out. The control unit is released by actuating the arresting hook. When removed, the TEST button below the LED must be pressed and held for at least five seconds.

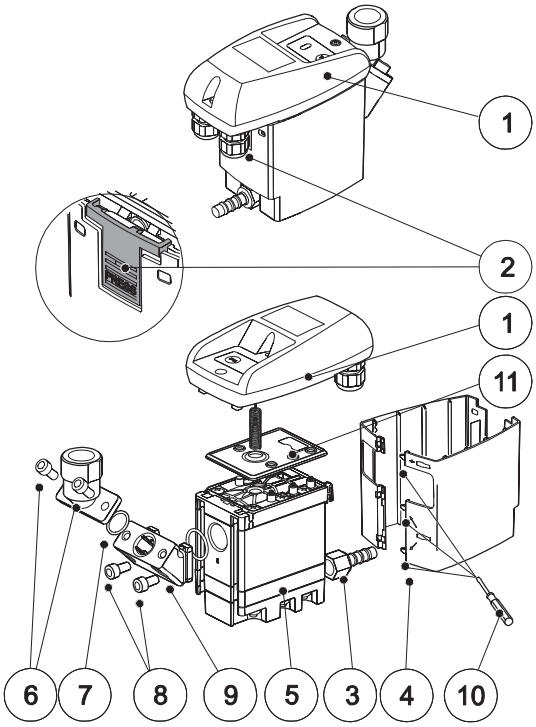

2. Remove the control unit (1) by pressing the arresting hook (2)
3. Unfasten the D05 from the outlet (3).
4. Remove the design shell (4) (if there is one) using a screwdriver (10).
5. Detach the service unit (5) from the tubing at the inlet by removing the union nut.
6. **or** remove the screws (6) from the angle nozzle (7).

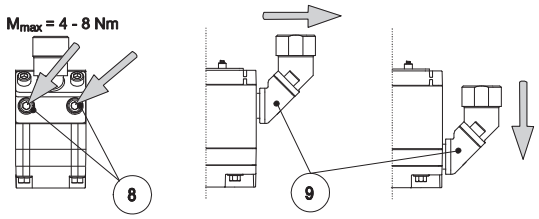

7. **or** remove the screws (8) at the intermediate adapter (9) and remove the latter from the service unit by pulling it downwards.
8. Check whether or not the new service unit (5) goes with the control unit (1).
   (model designation and colour of the arresting hook (2)).
9. Installation of the new service unit (5) in reverse order.

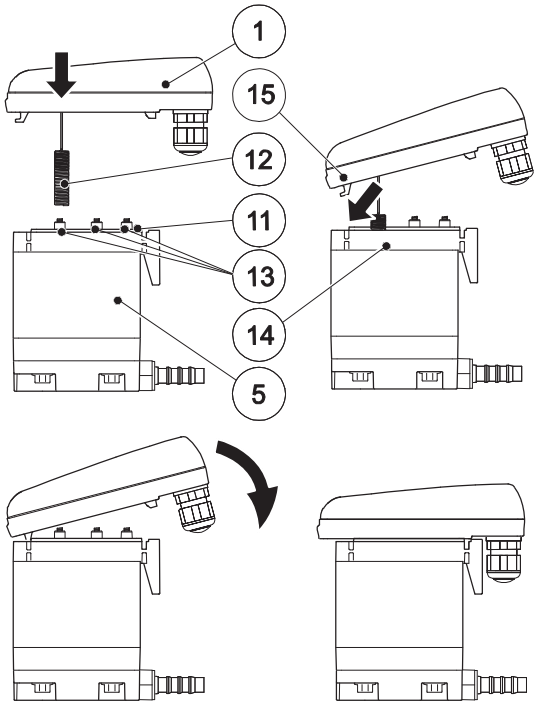

Installation of the control unit on the service unit:

1. Check whether or not the service unit (5) goes with the control unit (1) (model designation and colour of the arresting hook).
2. Check whether or not the sealing mat (11) and the contact springs (13) are clean, dry, and free from impurities.
3. Introduce the sensor (12) into the sensor tube plate (14).
4. Hang the hook (15) of the control unit (1) in the sensor tube plate (14).
5. Press the control unit (1) against the service unit (5) and snap into place.

Start-up subsequent to maintenance measures:

Always carry out prior to the start-up:

- Leak test of the screwed connector
- Check of the electrical connections
- Check of the correct engagement of the control unit

12 Troubleshooting and fault elimination

Symptoms	Possible reasons	Measures
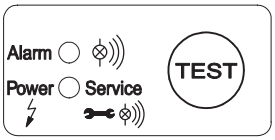 **LED does not light up**	Supply voltage incorrect Circuit board defective	Check voltage on the type plate Check the connections and the supply voltage Check the circuit boards for possible damage
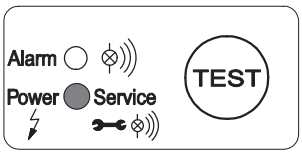 **LED lights continuously orange**	Failure during the start of the programme Circuit board defective	Separate the device from the supply voltage and reactivate after > 5 s Check the circuit boards for possible damage
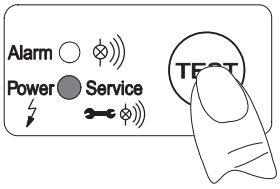 **Test button pressed, but no condensate discharge**	Feed pipe and/or discharge pipe blocked or obstructed Wear and tear Circuit board defective Service unit defective Minimum pressure not reached Maximum pressure exceeded	Check feed and discharge pipe Check whether or not the valve opens audibly (press the test button several times for > 2 seconds) Check the circuit board for possible damage Check the operating pressure
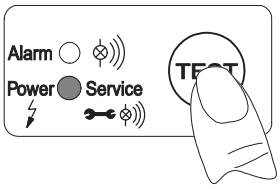 **Condensate discharge only when the test button is pressed**	Feed pipe without sufficient slope Cross section not large enough Condensate accumulation too high (surge) Service unit extremely dirty	Install feed pipe with a slope Replace the service unit
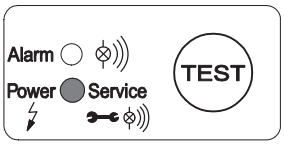 **Device blows off continuously**	Service unit defective or dirty	Replace the service unit

A

Alarm mode 11
Angle nozzle 20

B

Blows off 22

C

Condensate discharge disturbed 22
Control 19
Control unit 21

D

Danger compressed air 4, 13, 19
Danger supply voltage 5, 19
Data 7
Deflector area 15
Degree of protection 5, 16, 19
Dimension drawing 9
Dimensions 9

E

Electric diagram 18
Electrical data 8
Electrical installation 16
Exclusion from the scope of application 6
Exclusion of a field of application 6

F

Failure 22
Fault clearance 22
Fault diagnosis 22
Fault elimination 22
Feed pipe 15
Field of application 6
Filling level 10
Function 10

I

Inlet line 10
Installation 13
Installation and operating instructions 4
Installation and operating instructions 4
Instructions, safety instructions 4
Intermediate adapter 21

L

LED does not light up 22
LED lights continuously orange 22

M

Maintenance 19
Maintenance recommendation 20
Malfunction 22
Membrane 10
Mounting 13

N

No condensate discharge 22

O

Outlet line 10

P

Pictograms 4
Pilot valve 10
Pressure differences 15
Proper use 6

Q

Qualified personnel 5, 16, 19

S

Safety instructions 4
Self-test 11
Sensor tube plate 21
Service measures 4, 13, 19
Service unit 20
Slope 15
Spare parts 5
Symbols 4

T

Technical data 7
Trouble sources 11
Troubleshooting 22

V

Venting line 15

W

Water pocket 15

Technical alterations reserved!

Technische Änderungen vorbehalten • Sous réserve de modifications technicques • Technische gereserveerde wijzigingen • Alterazioni tecniche riservate • Alteraciones técnicas reservadas • As alterações técnicas reservaram • Ret til tekniske ændringer forbeholdes • Reserverade tekniska förändringar • Oikeudet teknisiin muutoksiin pidätetään • Αλλαγές που διατηρούνται τεχνικές • Technické změny vyhrazeny • Jätame endale õiguse teha tehnilisi muudatusi • Műszaki módosítások joga fenntartva • Pasiliekame teisę daryti techninio pobūdžio pakeitimų • Lespējamas tehniskas izmaiņas • Zmiany techniczne zastrzeżone • Tehnične spremembe pridržane • Technické zmeny vyhradené • Ne rezervăm dreptul de a efectua modificări tehnice • Запазваме си правото на технически промени • Teknik değişiklikler saklı tutulur • Det tas forbehold om tekniske endringer • Право на технические изменения сохраняется

Donaldson.
FILTRATION SOLUTIONS

Donaldson Filtration Deutschland GmbH
Industrial Filtration Solutions
Büssingstrasse 1
D-42781 Haan, Germany

www.donaldson.com

KONFORMITÄTSERKLÄRUNG
DECLARATION OF CONFORMITY
DECLARATION DE CONFORMITE
DICHIARAZIONE DI CONFORMITA
DECLARATION DE CONFORMIDAD
DECLARACÃO DE CONFORMIDADE
VERKLARING VAN OVEREENSTEMMING
OVERENSSTEMMELSES-ATTEST

Donaldson Filtration Deutschland GmbH
Industrial Filtration Solutions
Büssingstraße 1
D-42781 Haan, Deutschland

Tel. +49 (0) 21 29/5 69-0
Fax +49 (0) 21 29/5 69-1 00
Internet: www.donaldson.com
E-Mail CAP-de@donaldson.com

EU Declaration of Conformity

Acc. to Pressure Equipment Directive 2014/68/EU

We hereby declare that the products indicated hereafter, comply with the stipulations of the relevant guidelines and technical standards. This declaration only refers to products in the condition in which they have been placed into circulation. Parts which have not been installed by the manufacturer and / or modifications which have been implemented subsequently remain unconsidered.

Product designation / series:	Ultrapac HED, ALD, MSD, Oilfreepac OFP, Ultrapure ALG-S
Type:	0005, 0010, 0015, 0025, 0035/35S, 0080/80S 0100/100S, 0150/150S, 0175, 0225/225S, 0300/300S, 0375/375S, 0550, 0650, 0850, 1000
Voltage variants:	230 VAC, 115 VAC, 24 VDC
Serial number:	see name plate
Product description and function:	Adsorption dryer for purification and drying of compressed air

Pressure Equipment Directive 2014/68/EU

Applied conformity procedure:	Category I / Module A
Fluid group acc. to Art. 13:	Group 2

Component, consists of following pressure-bearing components:

Type	Description	Perm. operating pressure	Category	Module	CE labeling acc. to	Serial number
0225, 0300, 0375	Filter housing, pre-filter DF-0450	16 bar	I	A	2014/68/EU	s. name plate
0550	Filter housing, pre-filter DF-0600	16 bar	I	A	2014/68/EU	s. name plate
0650	Filter housing, pre-filter DF-0750	16 bar	I	A	2014/68/EU	s. name plate
0850, 1000	Filter housing, pre-filter DF-1100	16 bar	I	A	2014/68/EU	s. name plate
0225, 0300, 0375	Filter housing, afterfilter DF-0450	16 bar	I	A	2014/68/EU	s. name plate
0550	Filter housing, afterfilter DF-0600	16 bar	I	A	2014/68/EU	s. name plate
0650	Filter housing, afterfilter DF-0750	16 bar	I	A	2014/68/EU	s. name plate
0850, 1000	Filter housing, Afterfilter DF-1100	16 bar	I	A	2014/68/EU	s. name plate
0225 - 1000	Piping system, screwed, pressed fittings, various fittings	16 bar	Art. 4, par. 3		none	none
0225 - 1000	Adsorber vessel 1+2	16 bar	Simple pressure vessel acc. to 2014/29/EU		2014/29/EU	s. name plate

Donaldson Filtration Deutschland GmbH
Industrial Filtration Solutions
Büssingstraße 1
D-42781 Haan, Deutschland

Tel. +49 (0) 21 29/5 69-0
Fax +49 (0) 21 29/5 69-1 00
Internet: www.donaldson.com
E-Mail CAP-de@donaldson.com

Applied rules:	AD 2000
Applied standards and technical specifications:	DIN EN ISO 12100:2011-03

Types 0005, 0010, 0015, 0025, 0035, 0080, 0100, 0150 and 0175 do not fall into any category for pressure equipment and are designed in accordance with article 4, paragraph 3, in accordance with the rules applicable in the Member States with good engineering practice and are made accordingly.

Low-Voltage Directive 2014/35/EU

Applied standards and technical specifications:	EN 61010-1:2020-03

The devices with a supply voltage of 24 VDC do not come under the scope of application of the Low-Voltage Directive.

EMC Directive 2014/30/EU

Applied standards and technical specifications:	EN 61326-1:2022-11 Emission: Class B, Immunity: Industrial Area

Haan, 21.07.2023
Place and date of issue

Markus Breinig
Director Engineering
Industrial Gases